Cross-Technology Planning Platform for Wireless Carriers

Weiping Wang
Sr. Director – Global Sales Engineering
VPIsystems Inc

Agenda

- Wireless Networks Evolution
- Challenges in planning
  - Introduction of new high-bandwidth services
  - Backhaul network cost and complexity
  - Interconnect network complexity and cost
- Cross-Technology Planning Platform
  - Traffic Modeling and/or backhaul technology selection
  - Re-clustering backhaul
  - Sharing resources between core and backhaul
  - Optimize IXC/LEC hand-offs
- Value Proposition

Wireless Networks Evolution

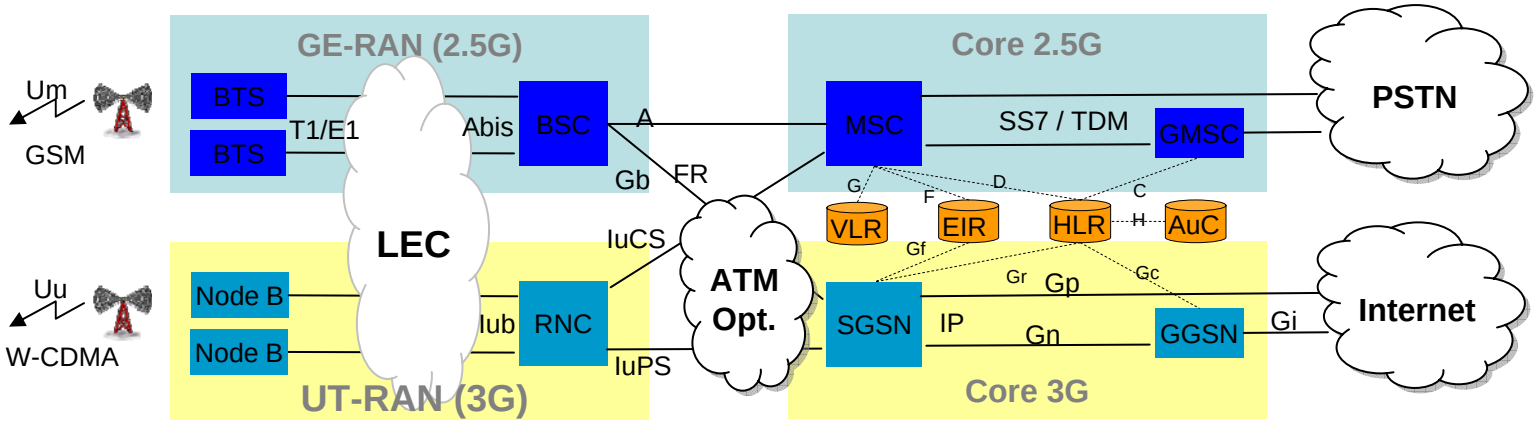

- Wireless Networks consist of:
  - <u>RAN/Backhaul</u> is the largest component providing connection to cell sites:
    - UTRAN (Node B, Leased Backhaul, RNC)
    - GERAN (BTS, Leased Backhaul, BSC); Enhanced data rates for GSM
  - <u>Core</u> provides call and session control to PSTN and Internet:
    - Voice network CS (MSC, GMSC),
    - Data network PS (SGSN, GGSN),
    - Database Registers

Wireless Product and Bit Rate Evolution

GSM Wireless Networks (mainly Europe):

	GERAN	UTRAN			
	GSM	GPRS	EDGE	UMTS	HSDPA
	9.6K	up to 171K	up to 553K	up to 2M	up to 3.6M
# of T1/E1:	2	2	2-4	4-6	6-10

Now Next 2 Years

CDMA Wireless Networks (mainly US):

	CDMA-One	CDMA-2000			
	CDMA	1X Rel. 0	1X Rel. 1	EV-DO	EVDO Rev A
	14.4K	up to 153K	up to 307K	up to 2.4M	up to 3.09M
# of T1/E1:	2	2	2-4	4-6	6-10

Now Next 2 Years

Challenges in Planning / What is changing?

- **Introduction of Packet Technology**
  - Introduction of high-speed data services over wireless networks raises new challenges in planning, deployment and operation. Success of these services critically relies on the proper network design
- **Explosive backhaul growth**
  - The wireless backhaul networks have reached a critical size, which requires advanced traffic modeling and network design systems to plan and manage
- **How to cope with rapid the rate of network roll-outs**
  - The number of product and network roll-outs increases in the 3G networks. How can planning and engineering departments deliver more in less time
- **Inefficient Interconnection**
  - Traditionally wireless traffic was handed off to a local or long distance carrier to transport to its destination. Increases in on-net traffic have now made it cost effective to keep a substantial portion of the traffic within the wireless network

Business Problem - Traffic Modeling for New Services

- Support high-speed data "Traffic Modeling" by translating services to bandwidth requirements

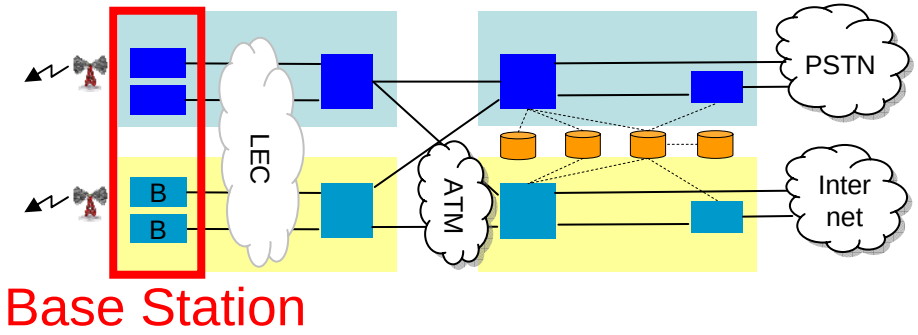

- Provide traffic models to predict backhaul capacity and QoS for high-speed data services
  - How much backhaul capacity at what QoS do I need for each mobile data user and for each service type?

Business Problem – Backhaul Cost & Complexity

- Each base station requires dedicated T1/E1 backhaul, causing linear relationship between bandwidth and OpEx (Leased backhaul accounts for 6% - 30% of wireless' OpEx)

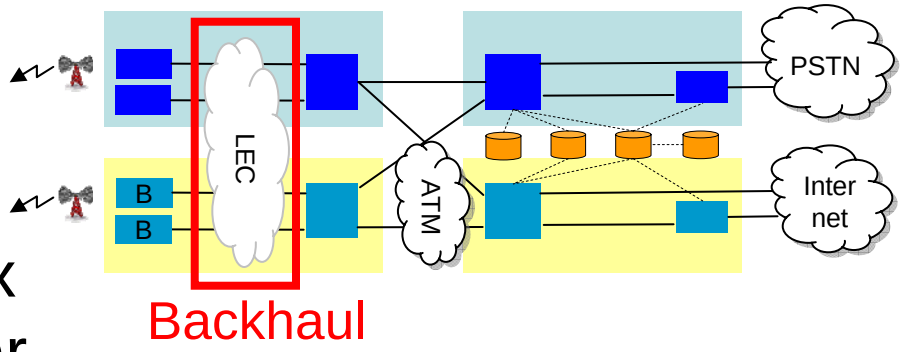

- New services (EV-DO, EV-DV, HSDPA) require 3-4 times more leased lines, making backhaul even more expensive
- Cost pressures drive the need to consider alternative backhaul technologies

Business Problem – Core Interconnect Complexity & Cost

- Organic growth and M&A leads to more coverage and complex interconnections, which makes some old traffic hand-offs to other carriers unnecessary.

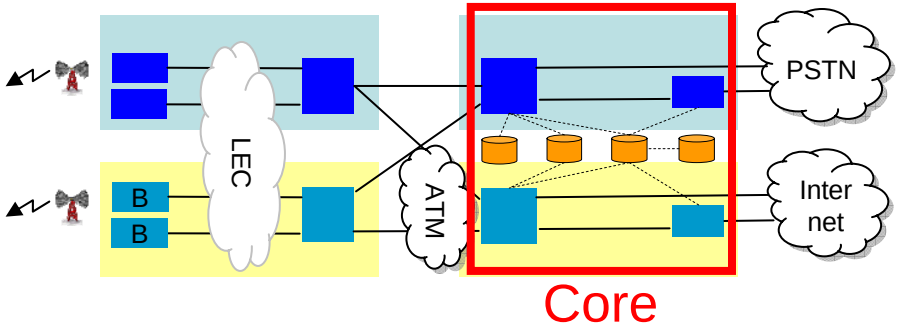

- Hence, there are sub-optimal routes that increases OpEx. By reviewing network routing, likely to uncover legacy "extra hops" that are costing carrier money

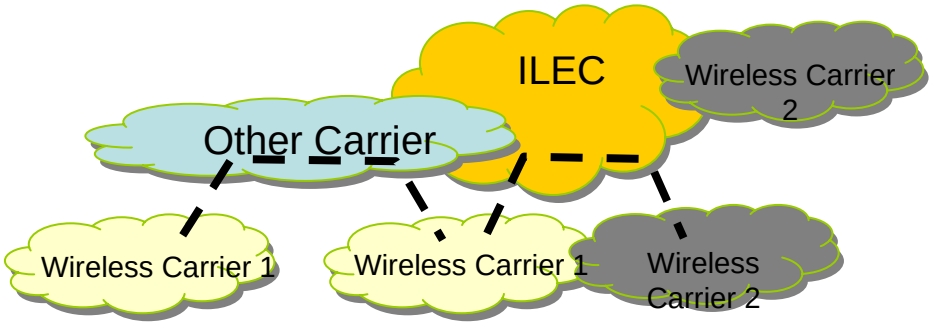

System solution offering for Backhaul

Today's Core and Backhaul Network

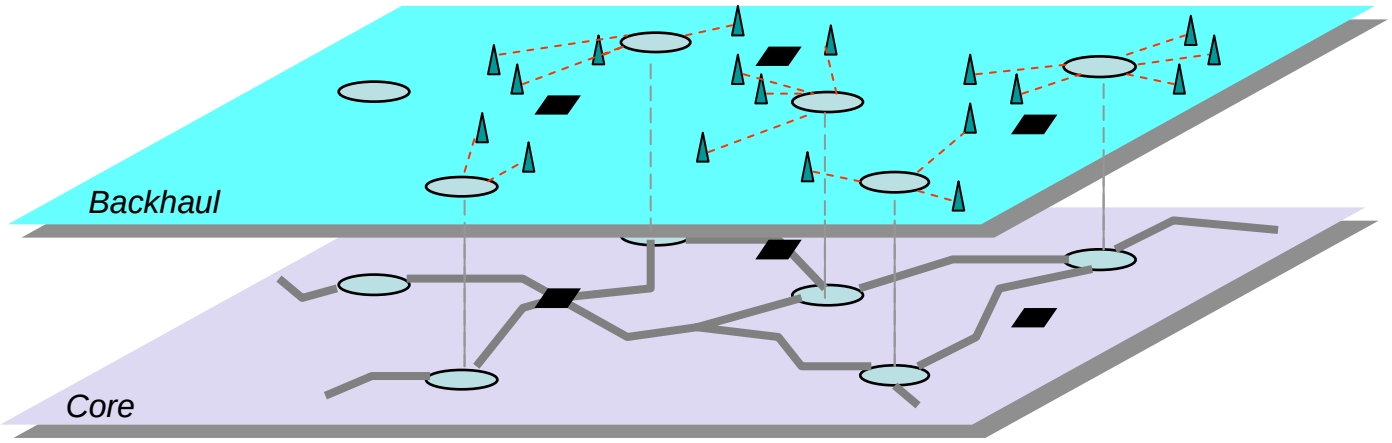

After re-clustering and sharing of resources

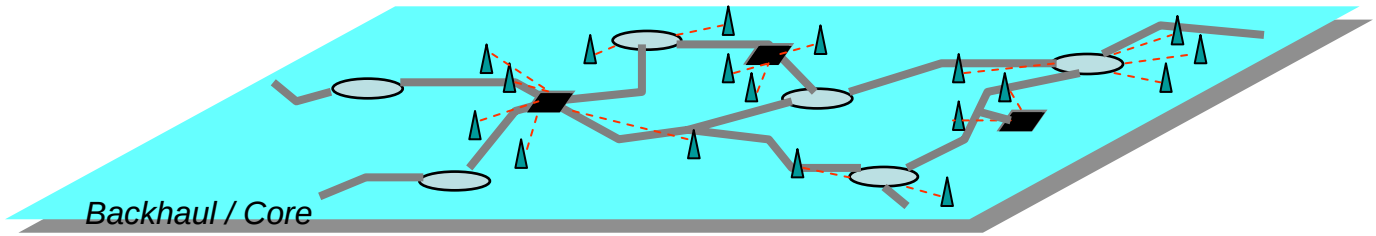

System solution offering for Backhaul

- Re-cluster your backhaul to drive cost down
- Merge core and backhaul into one transmission network
- Optimize the lease versus build scenario
- Ensure diversity and disaster recovery in the backhaul design

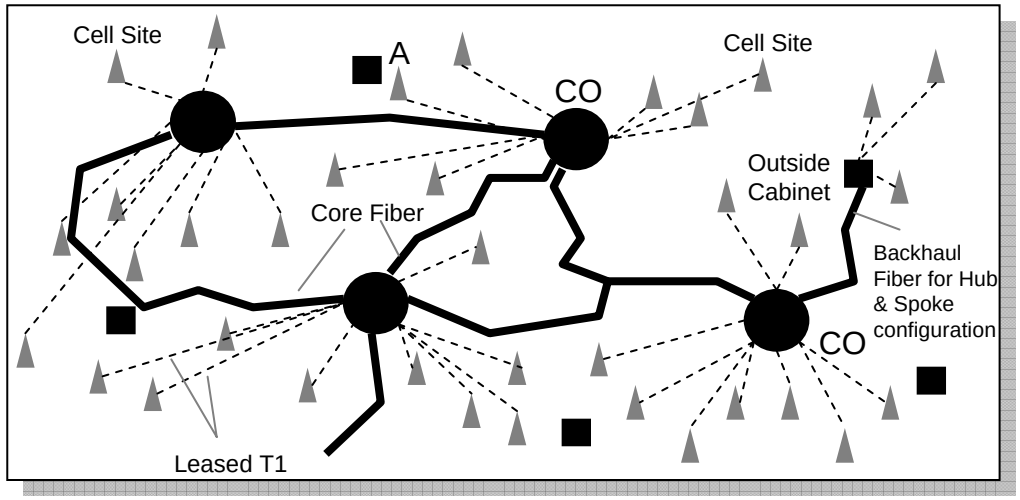

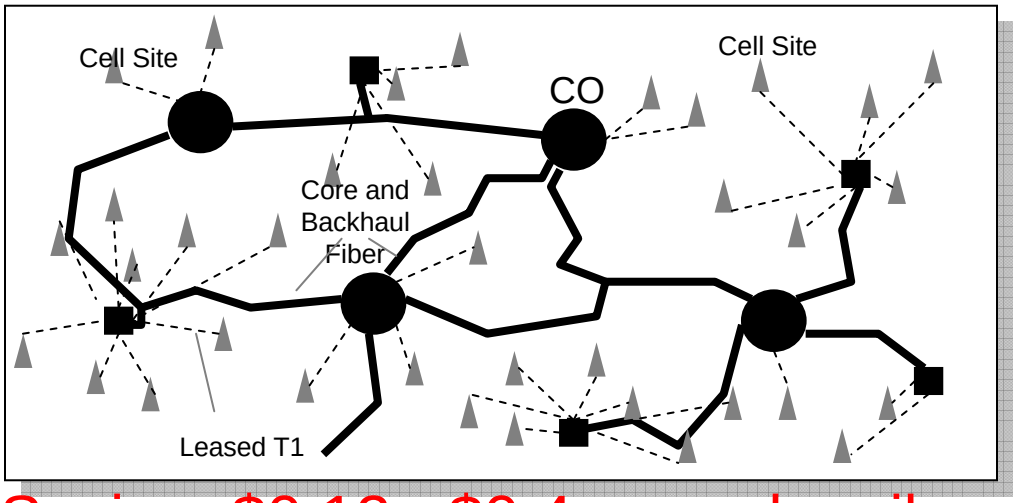

Saving: $0.12 - $0.4 per subscriber

System solution offering for Core Voice

Traffic hand-offs in a fragmented market with spotty coverage

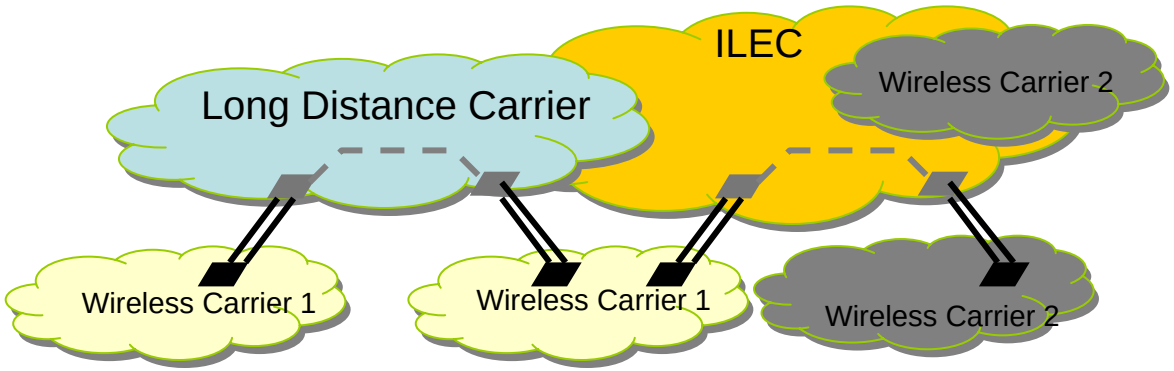

Improved traffic hand-offs after growth, mergers and acquisition

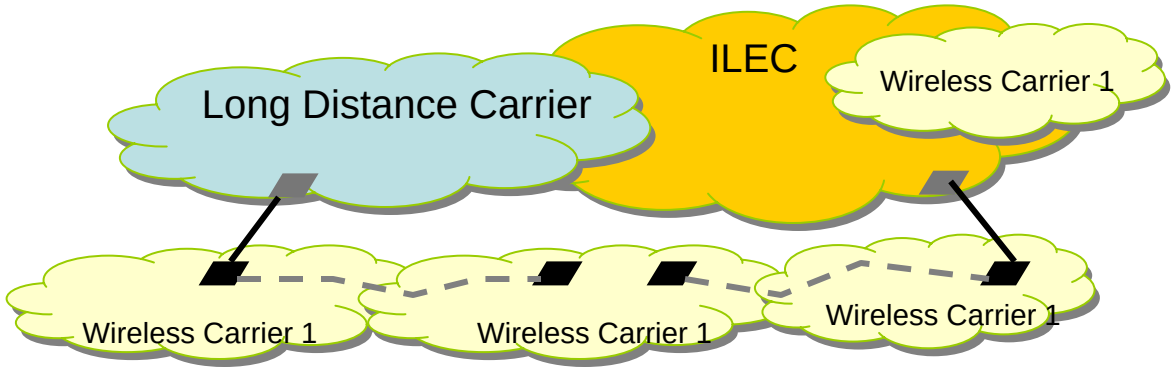

Switch

T1/E1 Trunks

Circuit Path

System solution offering for Core Voice

- Audit current routing, test the financial viability of potential routes or interconnects
- Determine what path calls should take inside the owned wireless network to avoid excessive Minutes-of-Use charges to other ILECs
- Remove suboptimal routes and optimize the interconnections

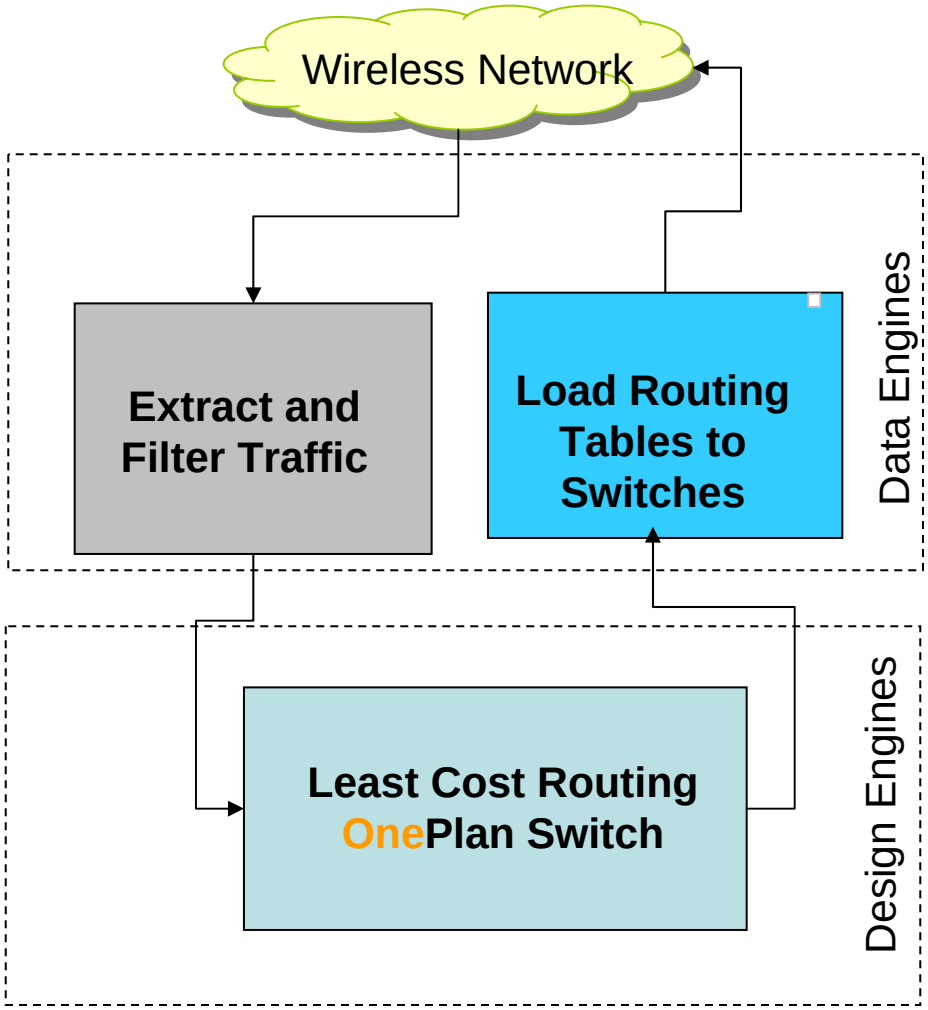

Saving: $0.005 per MoU

Traffic Modeling / Backhaul Technology Selection

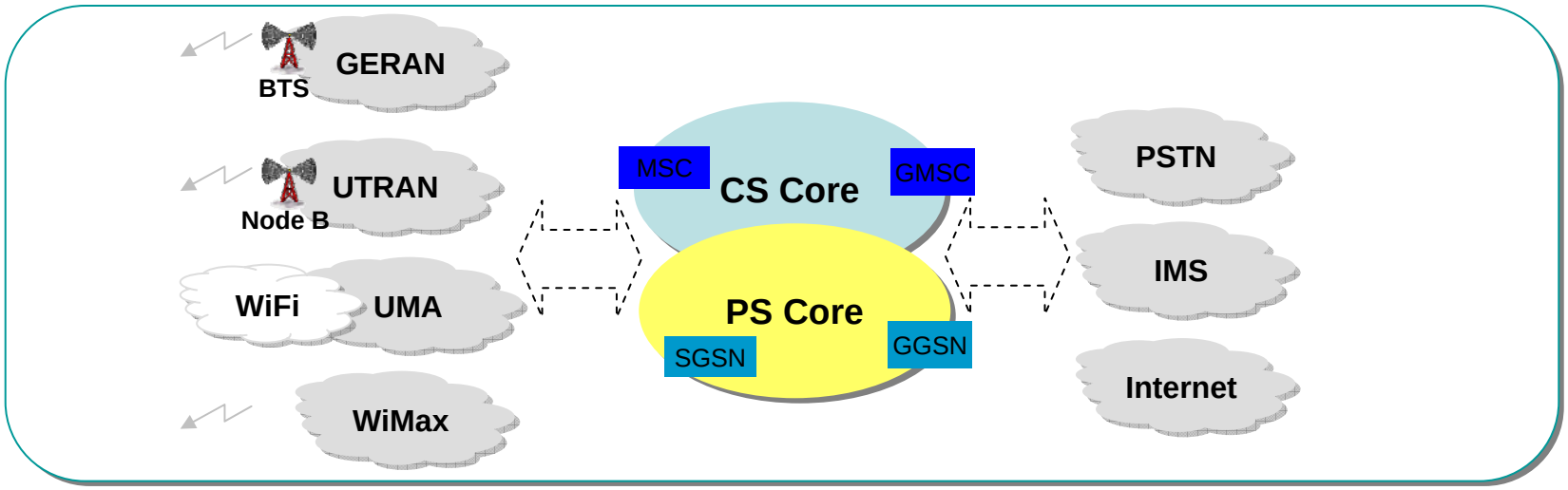

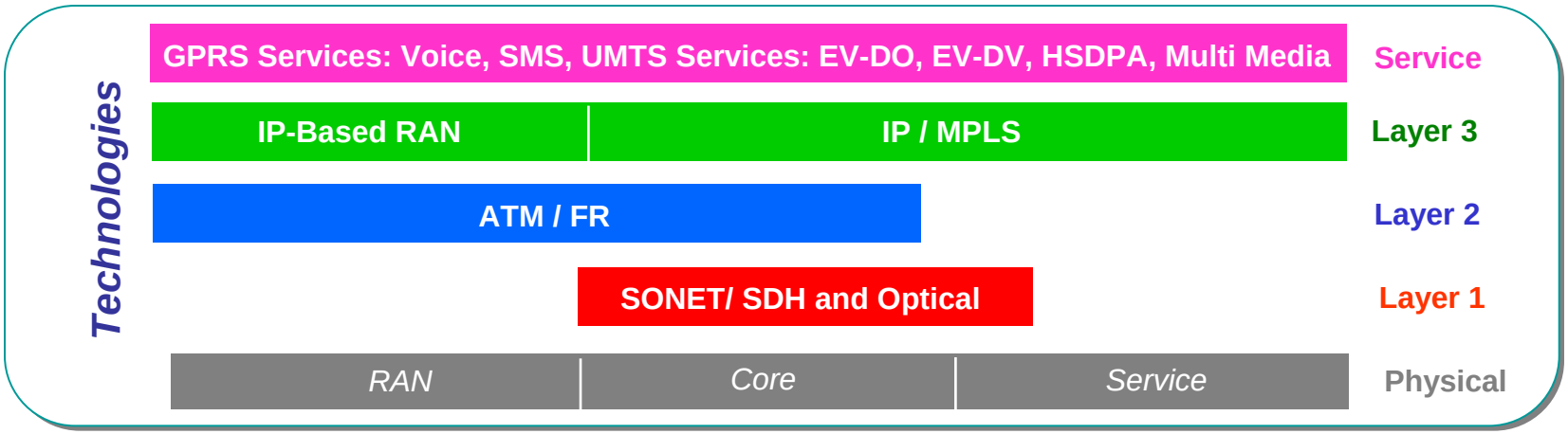

Supports multiple RAN technologies and Core technologies for planning and engineering

VPI's Vision for Cross Technology Planning - OnePlan System

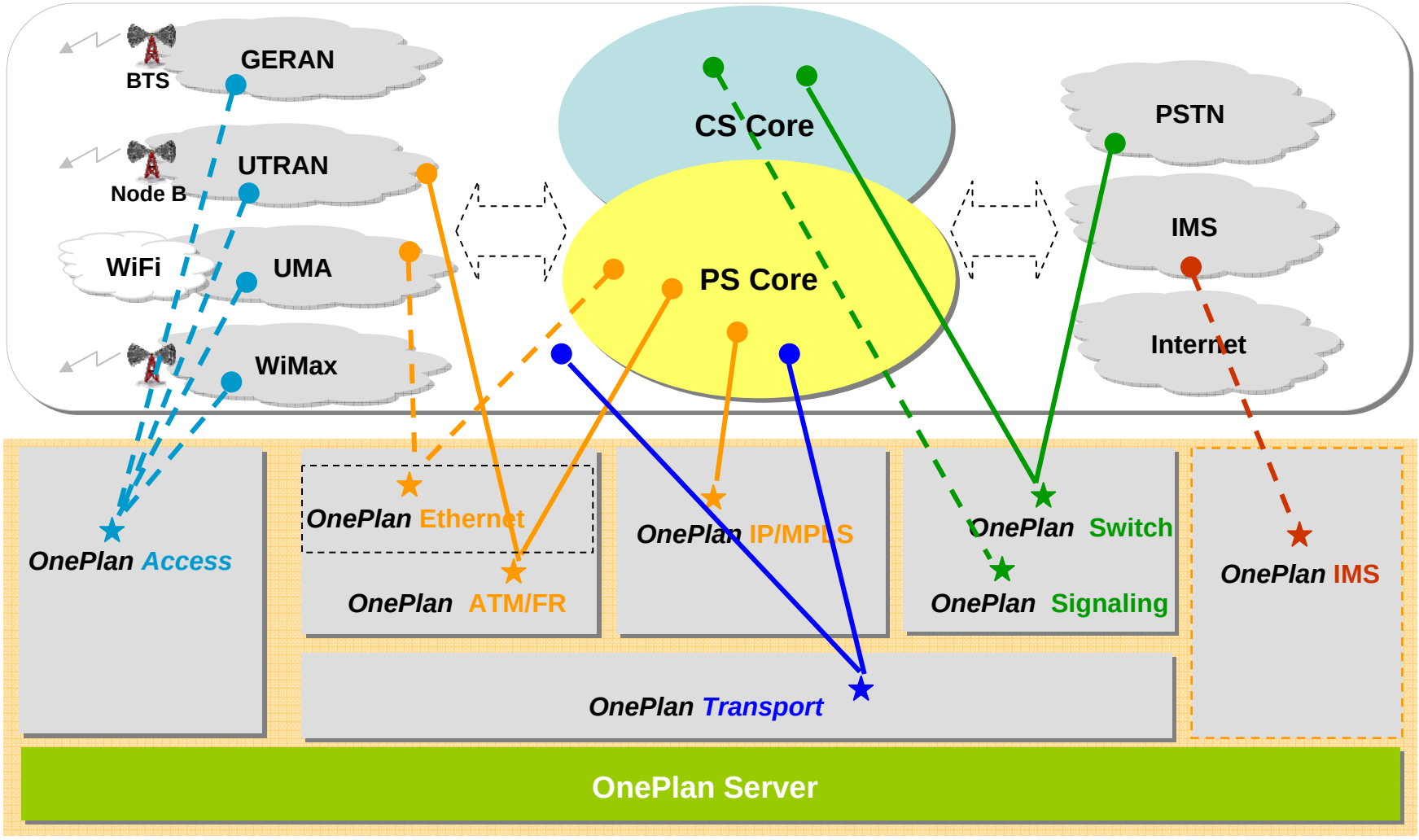

Functional architecture of OnePlan and its fit to NG wireless networks

Value Proposition for Wireless

- VPIsystems value to the backhaul network:
  - Re-cluster the backhaul connectivity to drive cost down
  - Merge core and backhaul transmission into one network to better leverage resources. (Remove organizational silos)
  - Use the core transport to offload some of the backhaul traffic
  - Optimize the lease versus build scenario for backhaul
  - Ensure diversity in the backhaul design

- VPIsystems value to the Core transport network
  - Minimize the OpEx for your long-distance and international traffic
  - Identify the best approach to carry your traffic to a remote destination
  - Determine what path calls should take inside the owned wireless network to avoid excessive MoU charges to alternate carriers
  - Optimize the trunk topology to reduce cost