Wireless Backhaul Transport Cost Reduction Strategies

Ying Hu, Mohcene Mezhoudi, Vijaya Poudyal

Alcatel-Lucent

101 Crawford Corner Road, Holmdel, New Jersey, USA

poudyal@Alcatel-Lucent.com

April 2007

Outline

- Wireless Network Background
- Wireless Backhaul Optimization
- Case Study Result
- Conclusions

Wireless Backhaul/Backbone Architecture

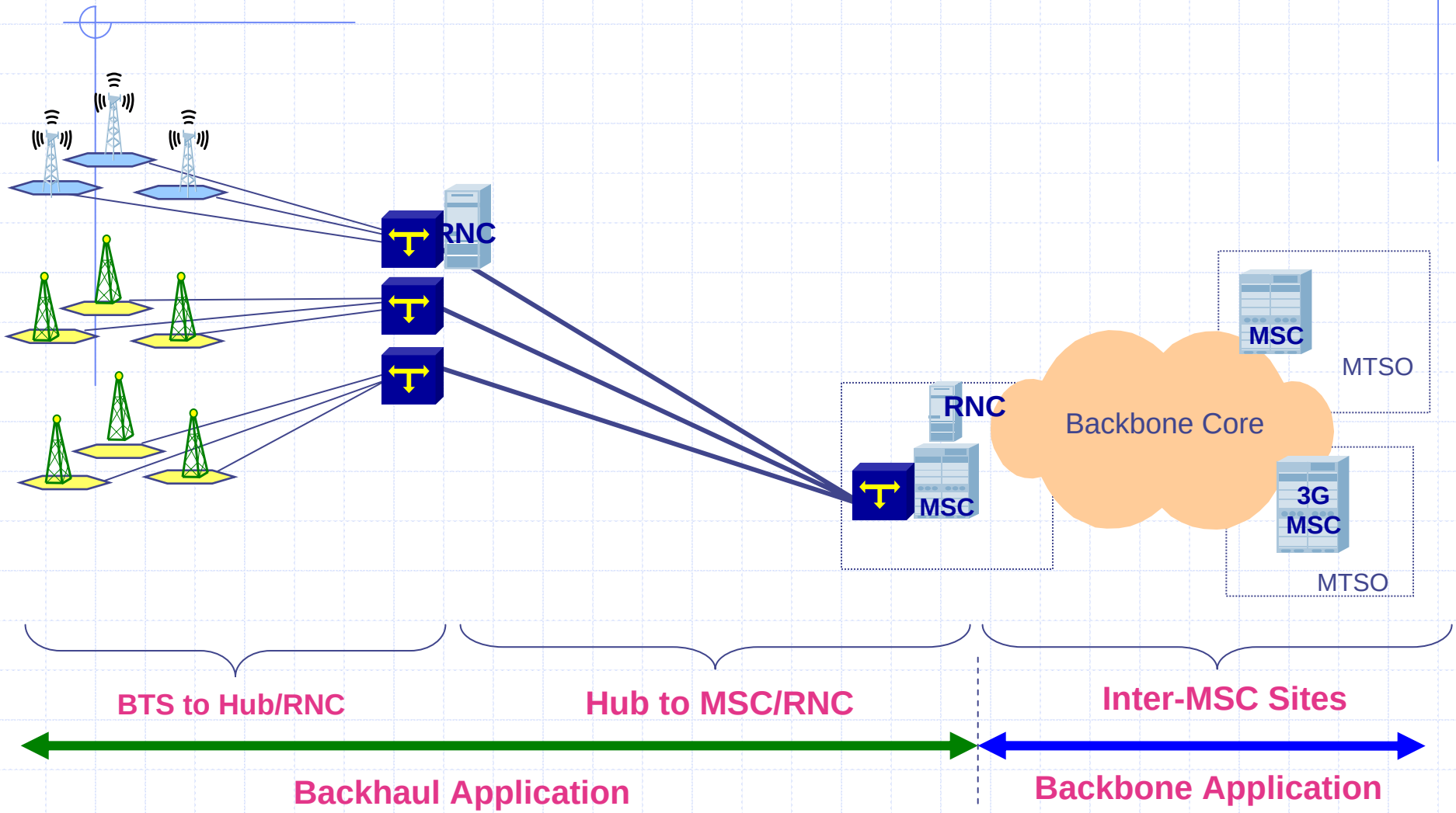

Wireless Demand Growth Indicators

- Subscriber growth (worldwide)*
  - 2004: 1600M
  - 2009: 2600M

  63% growth
- New BTS deployment/upgrades (worldwide)*
  - 2004: 1.8M cell sites
  - 2009: 3.5M cell sites

  94% growth
- Expanding T1 bandwidth per Cell Site (NAR) ++
  - 2005: 3 per Cell Site
  - 2009: 9 per Cell Site

  200% growth

*** In-Stat/MDR 07/05**
++ Geosource

Wireless Services Bandwidth Growth

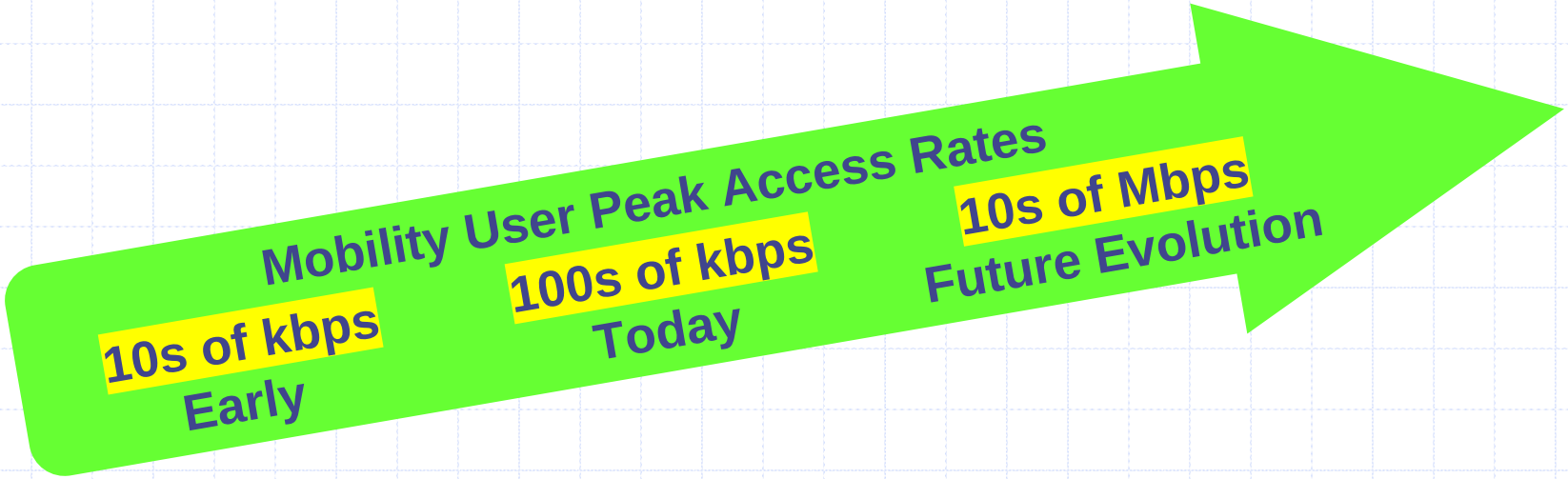

Today's Reality

Sprint PCS -- Sprint TV

15 FPS video streaming service (launched in August 2004) up from initial 1 – 2 FPS service in 2003.

Verizon Wireless consumer EV-DO offers VCAST

Bundles high-quality video (news, sports, entertainment, weather), 3D games and music services

Migration to 3G Technology and Services

- Being introduced in all major mobile providers networks (Cingular, Verizon Wireless, Sprint, etc.)
- Major rollouts of CDMA2000 1X EV-DO, GPRS, WCDMA/UMTS, HSDPA
- Supports multimedia based services (video, images, music, messages)
- Higher bandwidth (Mbps) needed to support services
  - Scalable, packet based networks to support convergence of services on single network infrastructure.

Backhaul Network Optimization

- Rapid deployment of wireless networks and focus on CAPEX minimization has resulted in
  - Neglect of transmission design & optimization
  - Inefficient transmission designs with higher OPEX

Significant opportunities for network optimization

Source: Yankee Group, Cost Optimization for Wireless Backhaul for Next-Generation Migration, March 2005.

Backhaul Transport - Alternatives

Backhaul transport → BTS to hubs and Hubs to MSC connection

- Lease transport capacity
  - Recurring leasing expenses
  - Dependent on third party to turn up and repair
- Build and operate transport network
  - Initial capital outlay
  - Recurring network operating expenses
  - Greater control over turn up and repair
- Selectively lease and build transport capacity
  - Recurring leasing expenses
  - Initial capital outlay
  - Recurring network operation expenses

Backhaul Transport - Decisions

- Where to lease?
- What capacities to lease?
- Should there be grooming locations? Where?
- Where to build?
- What capacities to build?
- Build point-to-point?
- Build Rings?

Influencing Factors

- Market Dependent
  - Traffic type, volume, and growth projections
  - BTS and MSC locations
  - Locations of central offices (potential hubs)
  - Availability of fiber infrastructure
  - Leasing costs
- Equipment Dependent
  - Equipment line capacity
  - Equipment tributary capacity
  - Equipment costs

Optimization - Objective

- Minimize backhaul network costs
- Choices
  - Selection of Hubs
  - Selection of leased capacity
  - Selection of build sites
  - Selection of build capacity

Optimization - Methodology

- Select hubs to minimize leasing costs
- Select sites to build infrastructure
- Select point-to-point or ring infrastructure
- Select ring route
- Perform sensitivity analysis

Example Site Distribution

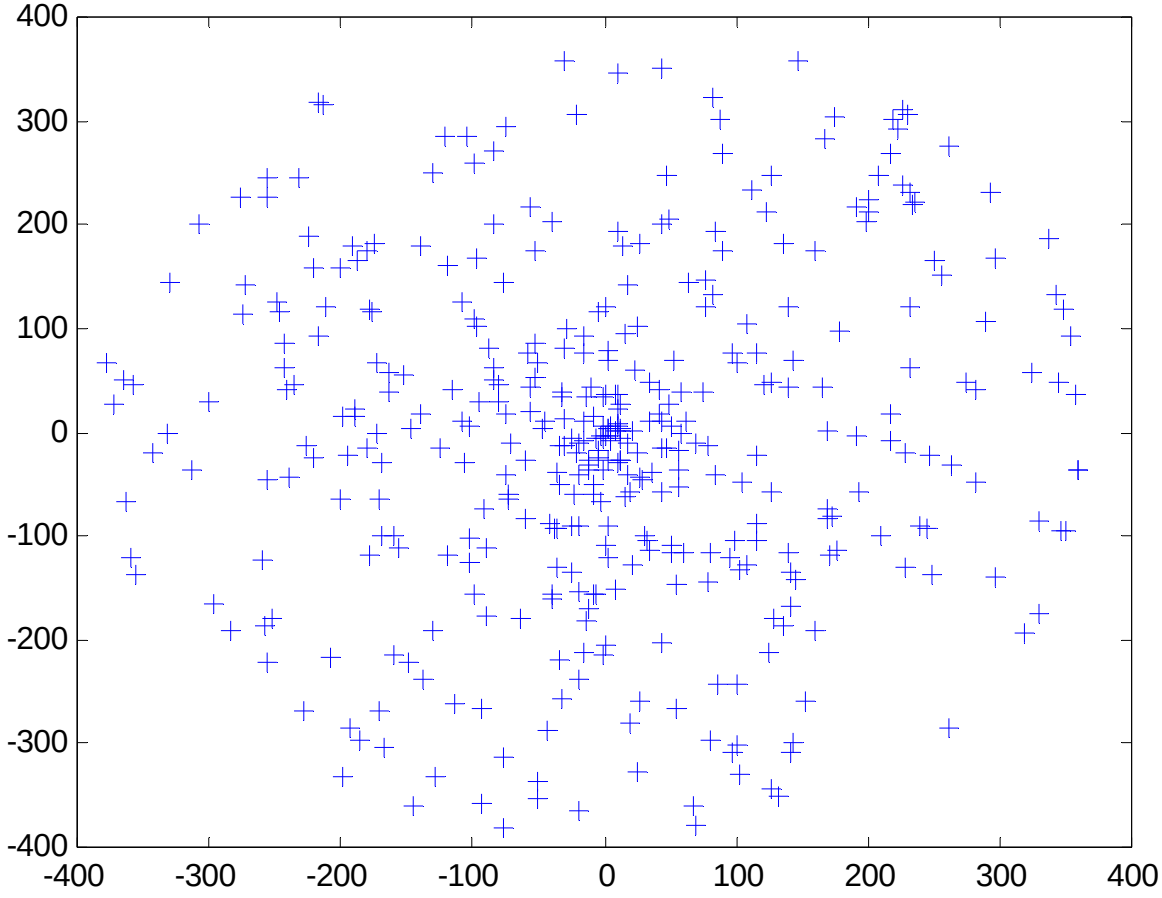

Example Hubs

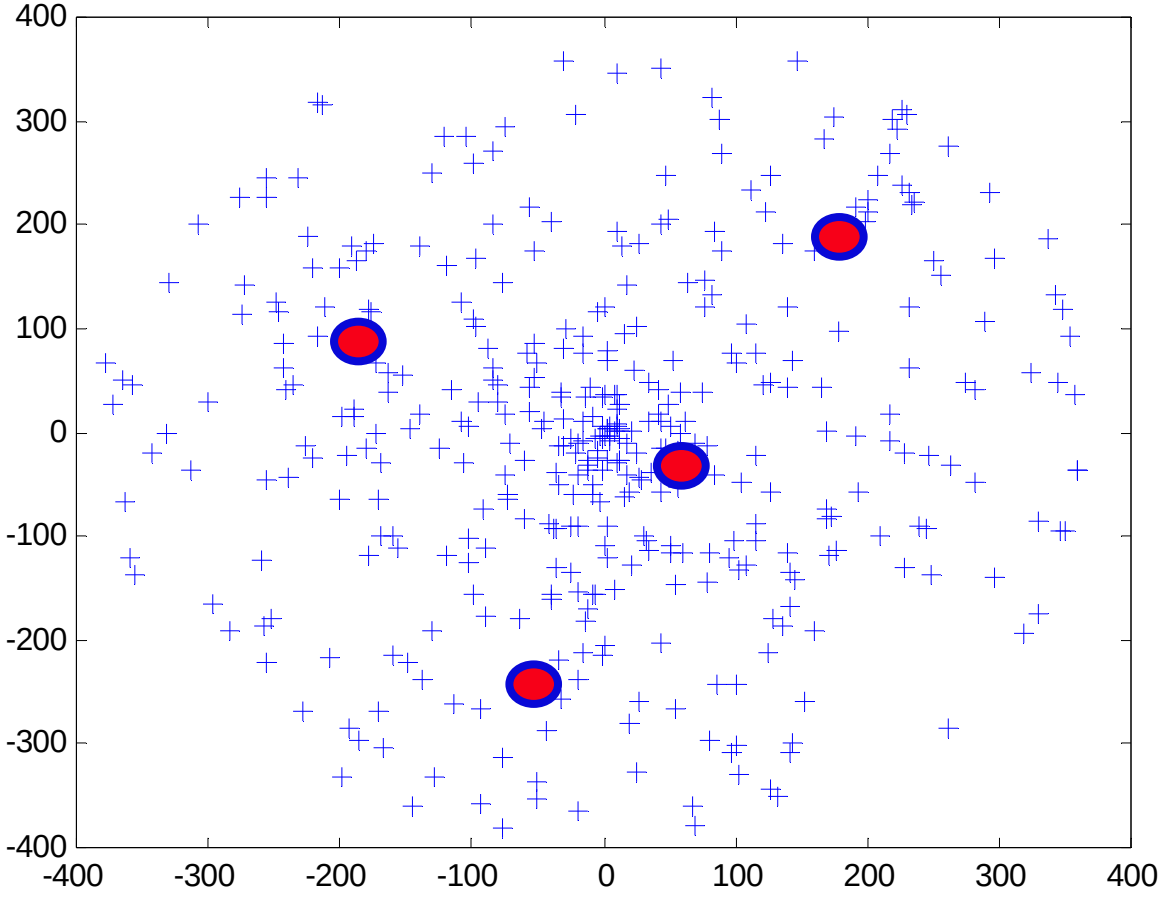

Example Homing

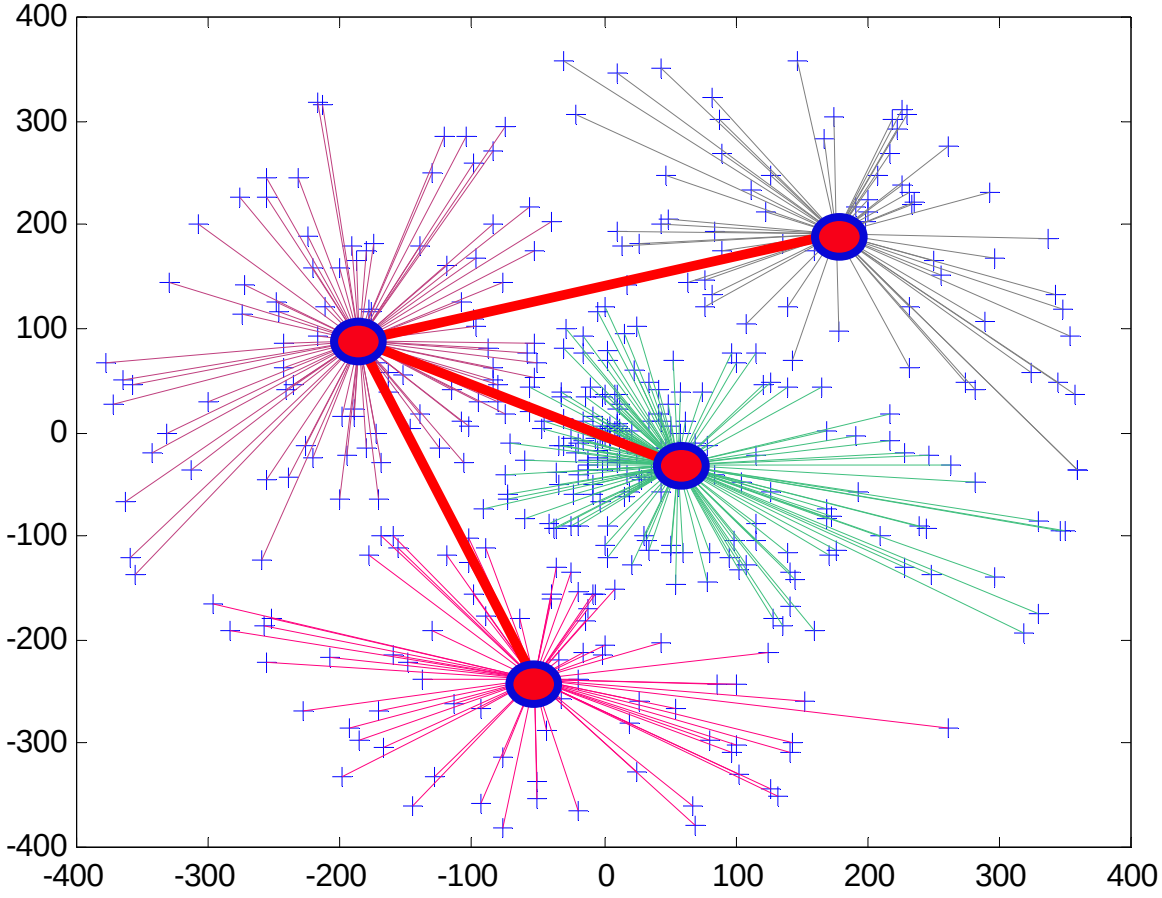

Example Backhaul Ring

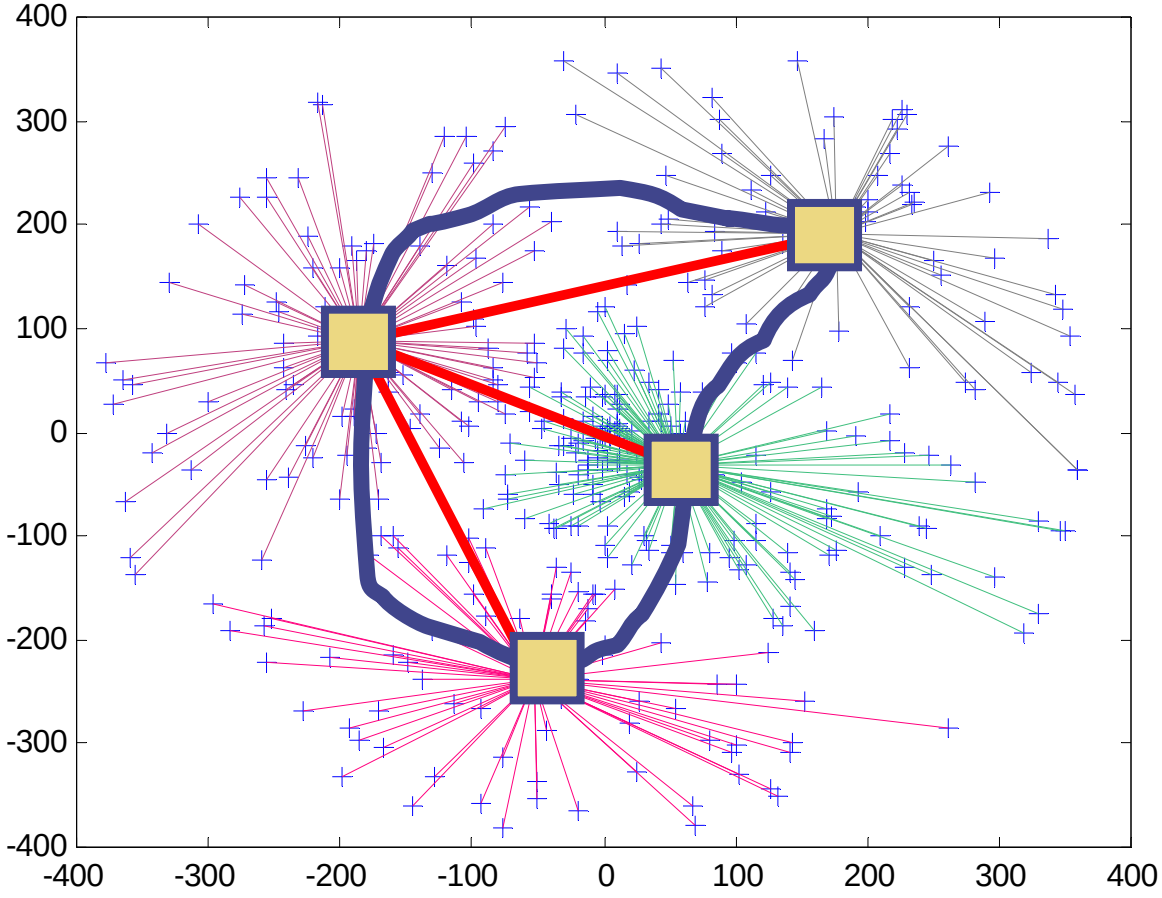

Impact of Number of Hubs

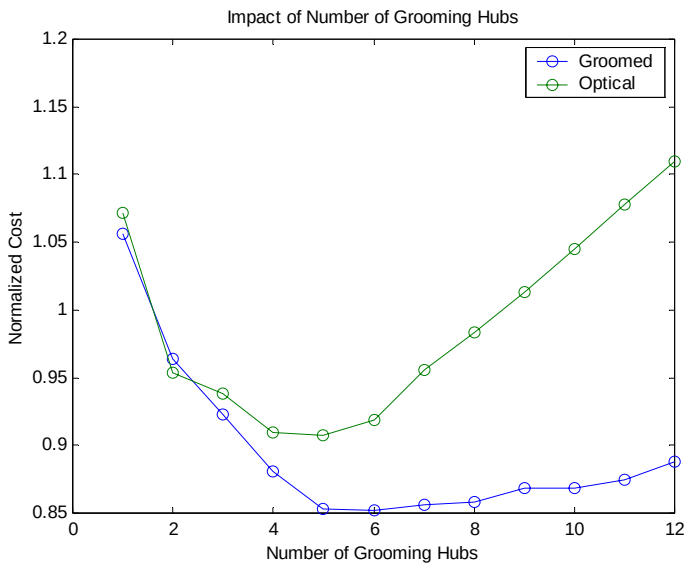

End of First Year

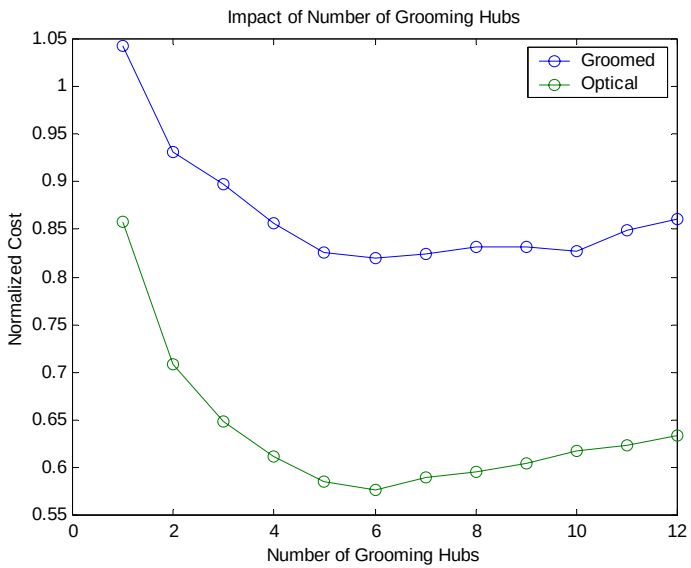

End of Fifth Year

Impact Over Five Years

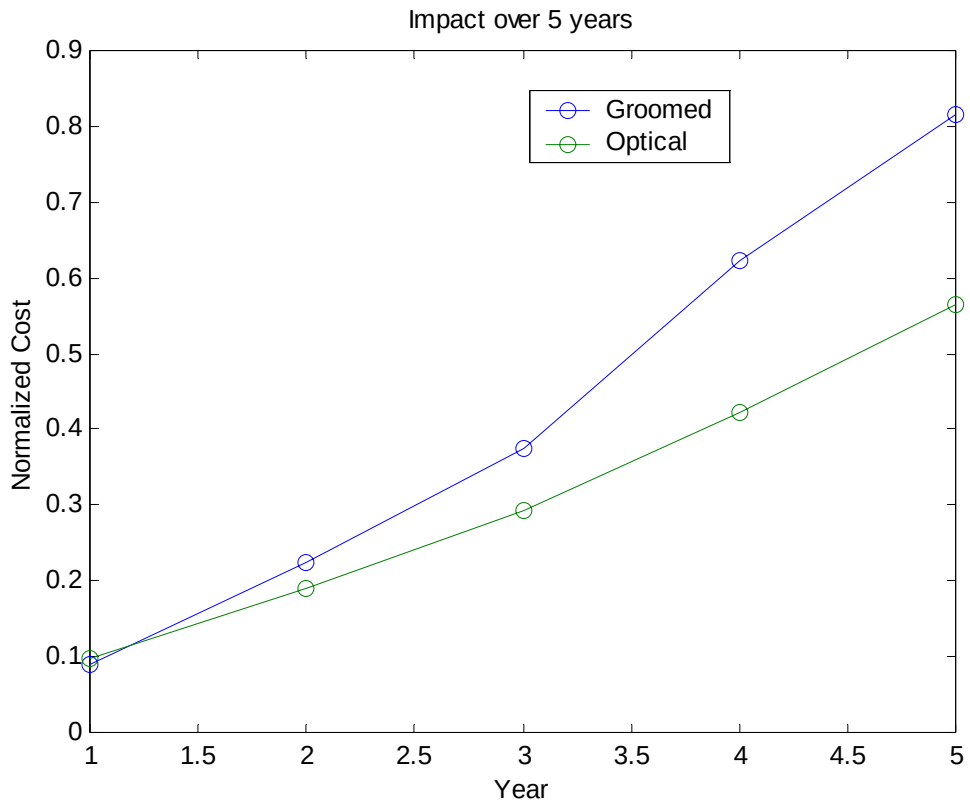

Case Study Assumptions

- 400 Cell sites – Average 2 to 3 T1/Site
- 1 MSC; 8 Hubs
- T3 fill rate varies between 40 – 60%
- ADM Fill up to 75%
- 65% to 75% T3s go from MSC to LD POP

- Incremental Growth Conditions:
  - High → 1000 total T1s/year growth
  - Medium → 400 total T1s/year growth
  - Low → 200 total T1s/year growth

Four Case Study Scenarios

	Lease only (no new build)	Lease and new build
Direct T1s to MSC	Scenario A (Baseline) Traditional Backhaul Design	Scenario B Future Alternative 1
Aggregate T1s to T3s	Scenario C Backhaul Design with Aggregation	Scenario D Future Alternative 2

- Scenario A (Baseline)
  - Lease T1s → Cells to MSC;
  - Lease T3s → MSC to LD POP
  - Traditional Backhaul Design
- Scenario C
  - Lease T1s → Cells to Hubs;
  - Lease T3s→ Hubs to MSC
- Scenario B
  - Lease T1s → Cells to 4 Hubs;
  - Build Ring → Hubs to MSC and LD POP;
- Scenario D
  - Lease T1s → Cells to All Hubs;
  - Lease T3s → between some Hubs;
  - Build Ring → Hubs to MSC and LD POP;

Case Study Scenarios

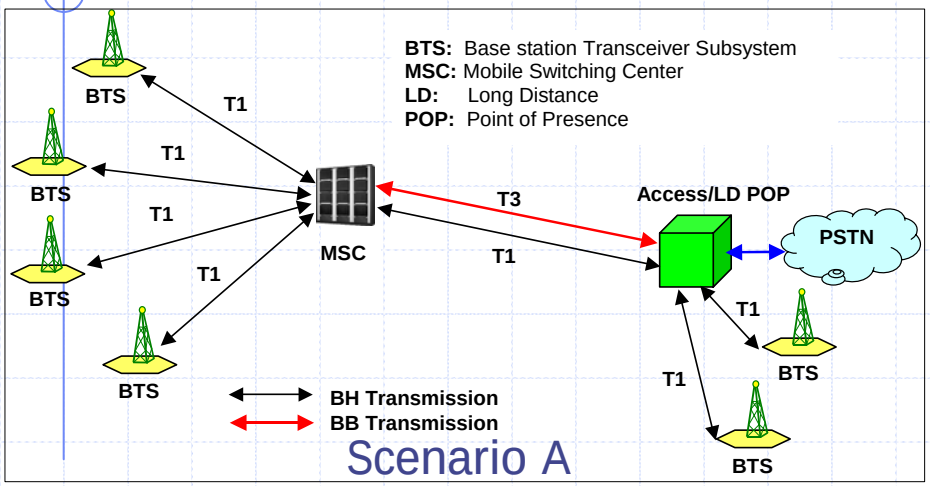

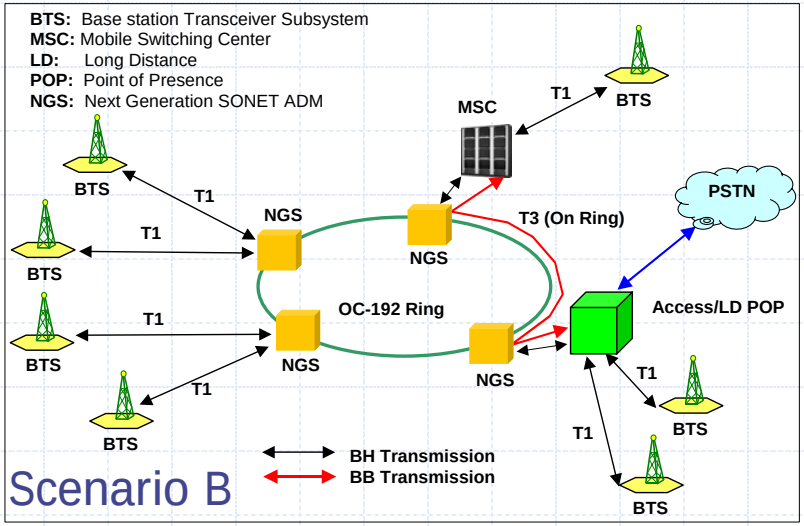

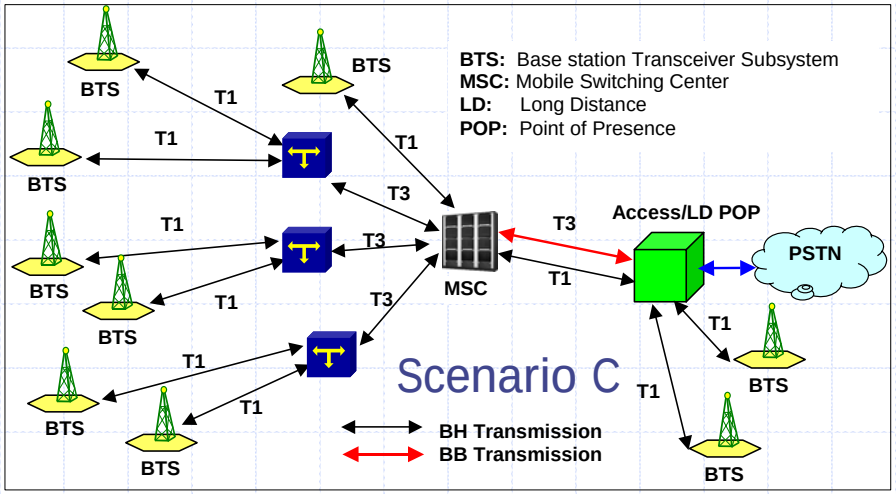

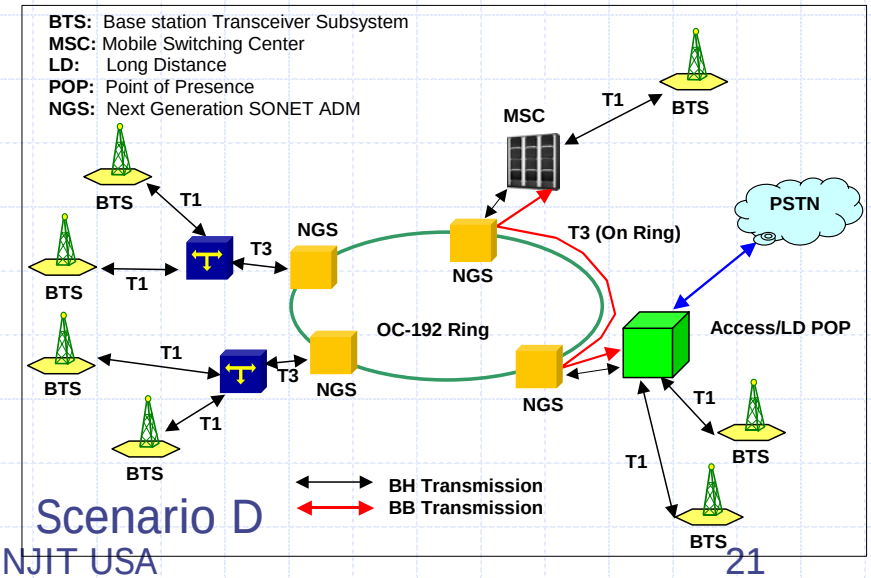

High Growth Results

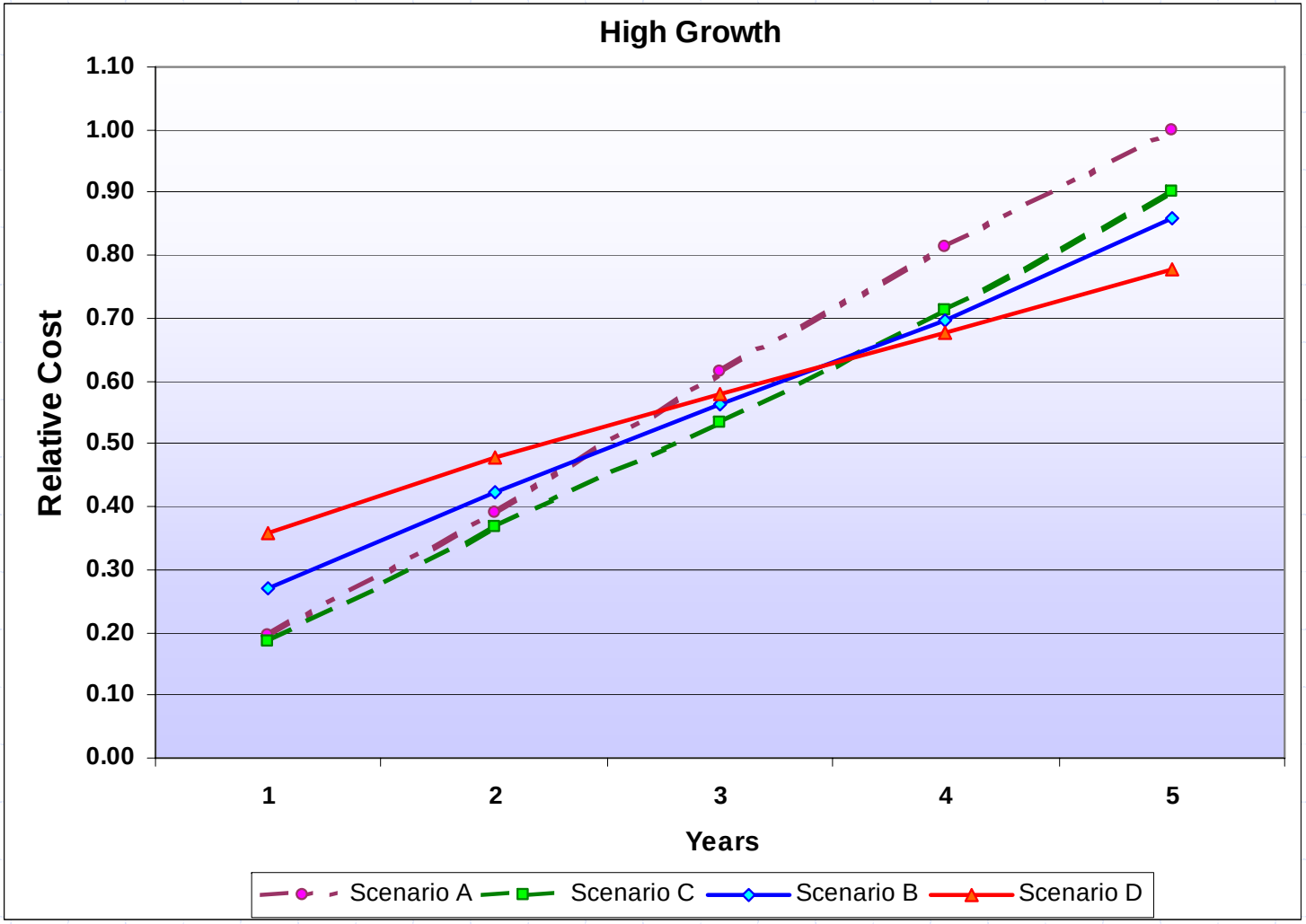

Medium Growth Results

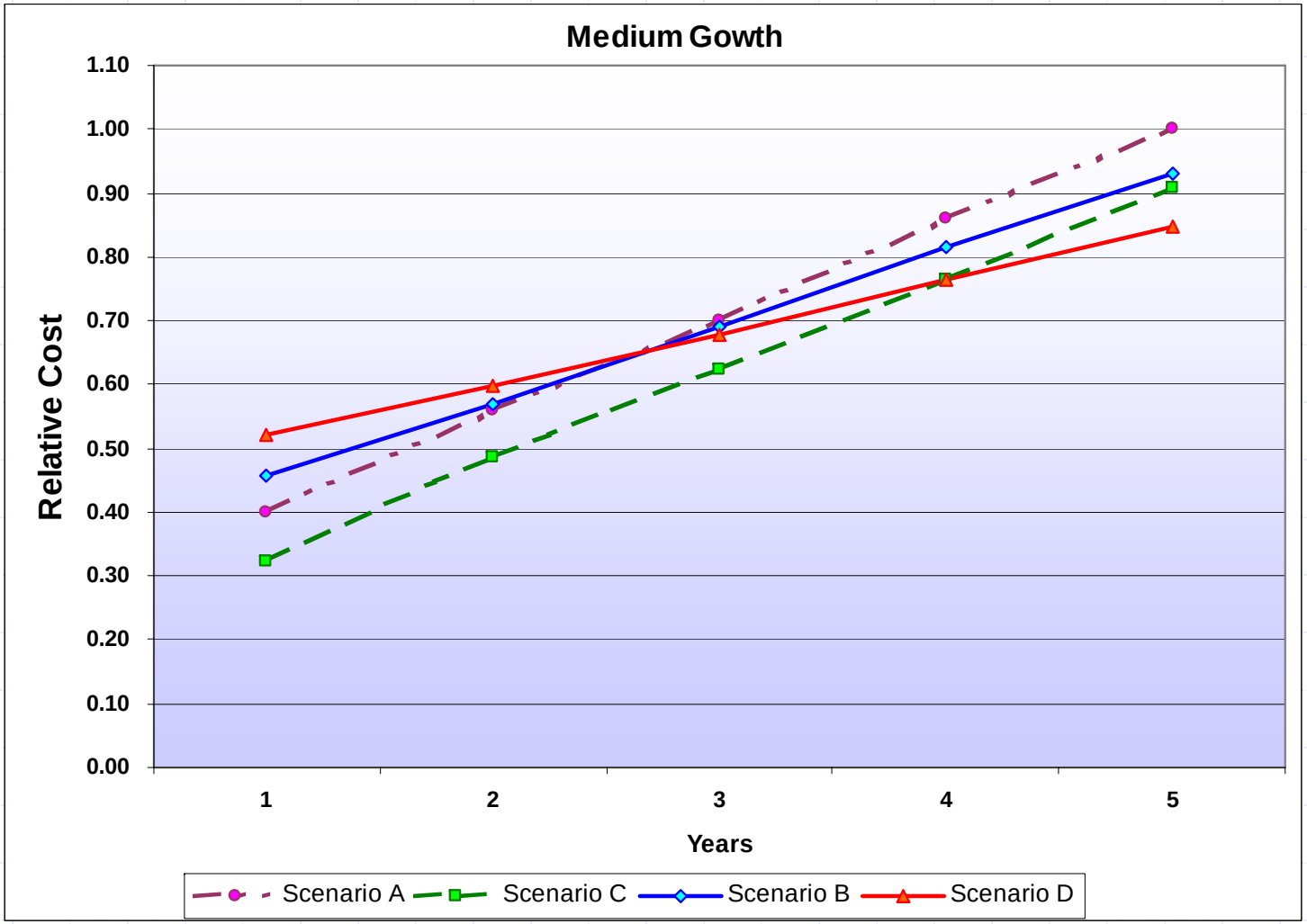

Low Growth Results

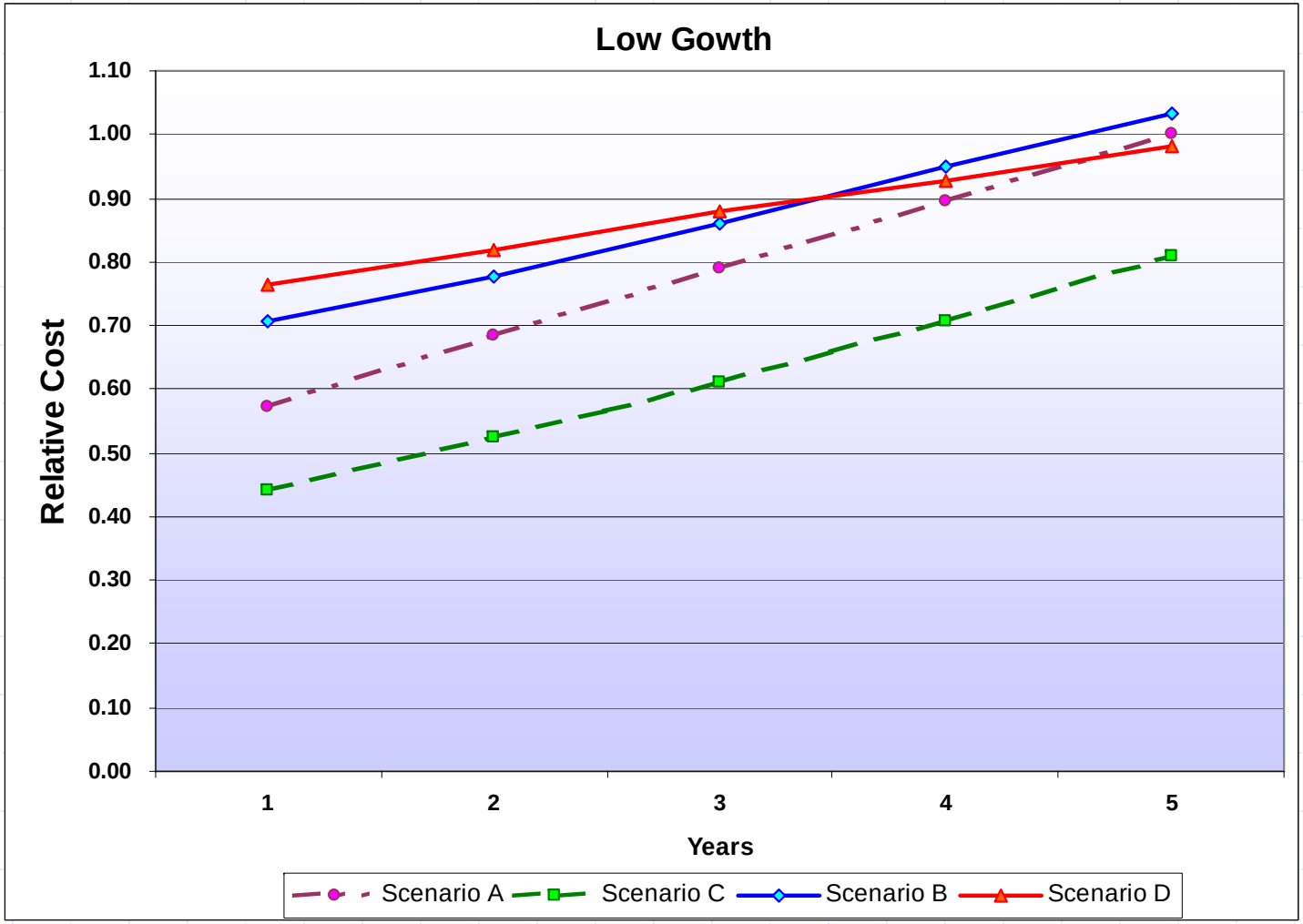

Case Study Observations

- **High Growth**
  - **Scenario A** (Baseline) can be implemented with low initial investment but becomes most costly within three years
  - **Scenario D** (Optical) becomes lowest cost after three and a half years but requires more initial investment
  - Could **start** with **Scenario B** initially and gradually migrate to **Scenario D**
  - **Scenario C** is always lower cost than **Scenario A** but is more costly than both optical build scenarios B and D in later years
- **Medium Growth**
  - **Scenario C** has **lowest** initial cost and remains the lowest cost option for the first four years
  - Although **Scenario D** (Optical) has **highest** initial cost it is the **lowest** cost option after four years
- **Low Growth**
  - **Scenario C** remains the lowest cost option for all five years
  - Both optical scenarios B and D are more costly than non-optical scenarios A and C

Conclusion

- Wireless backhaul network costs are a significant fraction of the total wireless network deployment and operations cost
- Backhaul network capacity will grow with the increase in wireless data and video traffic
- Optimizing the backhaul network can reduce backhauling costs and impact the profitability of wireless network operators
- The net cost reduction that can be achieved depends on deployment conditions and needs to be evaluated on a case-by-case basis