Evolutions of Long Haul Optical Networks and Restoration Architecture

Angela L. Chiu

AT&T Labs – Research

October 2006

AT&T Labs Research

Outline

- Evolution of LH DWDM Transport Systems
- Next Generation ULH Network with Degree-n ROADM/PXC
- All-optical Network Restoration Architecture
- Cost analysis on Four Restoration Schemes
- Collaborators: Guangzhi Li, John Strand

USA Transport Network Segments

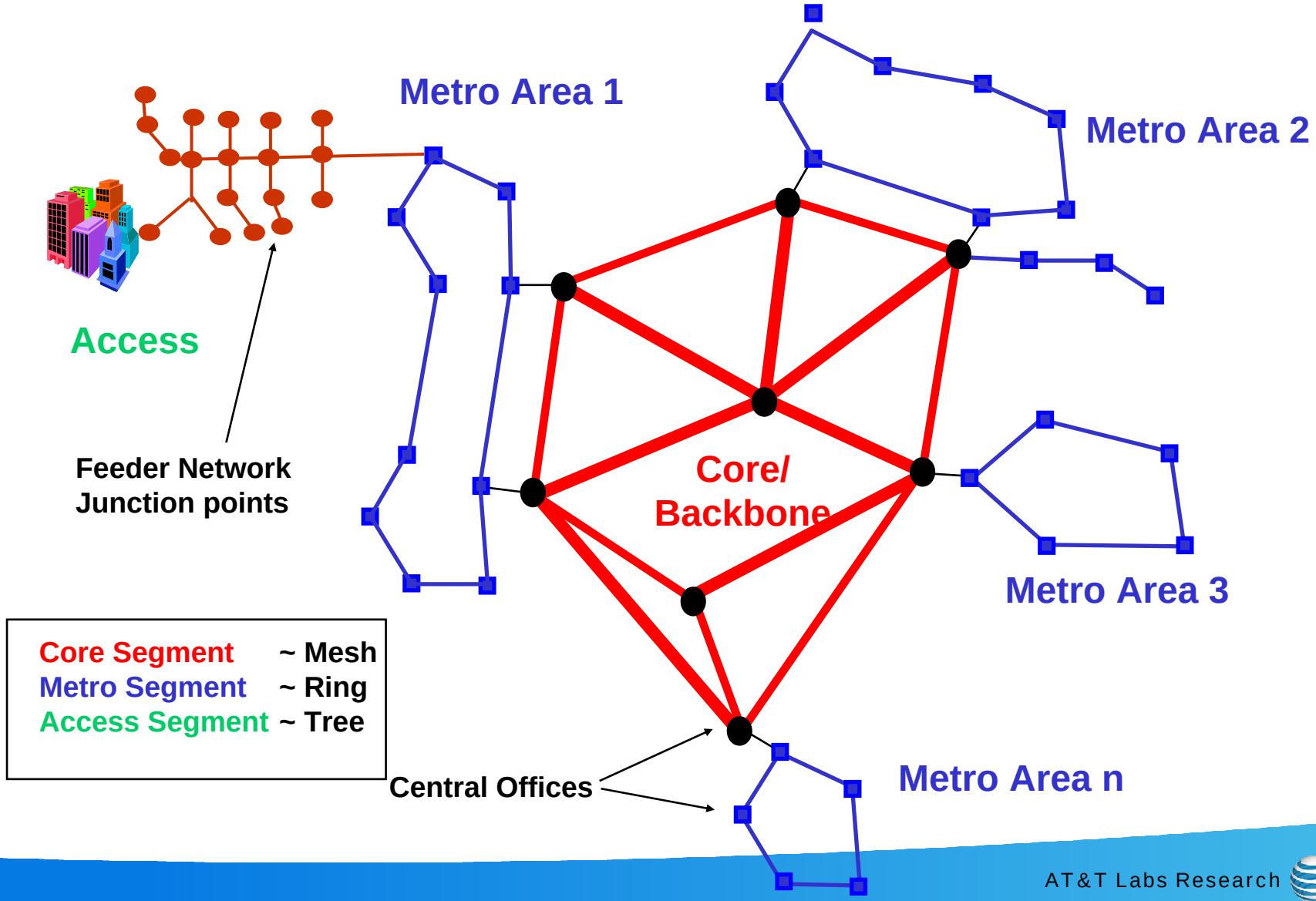

Evolution Story for Long Haul Networks

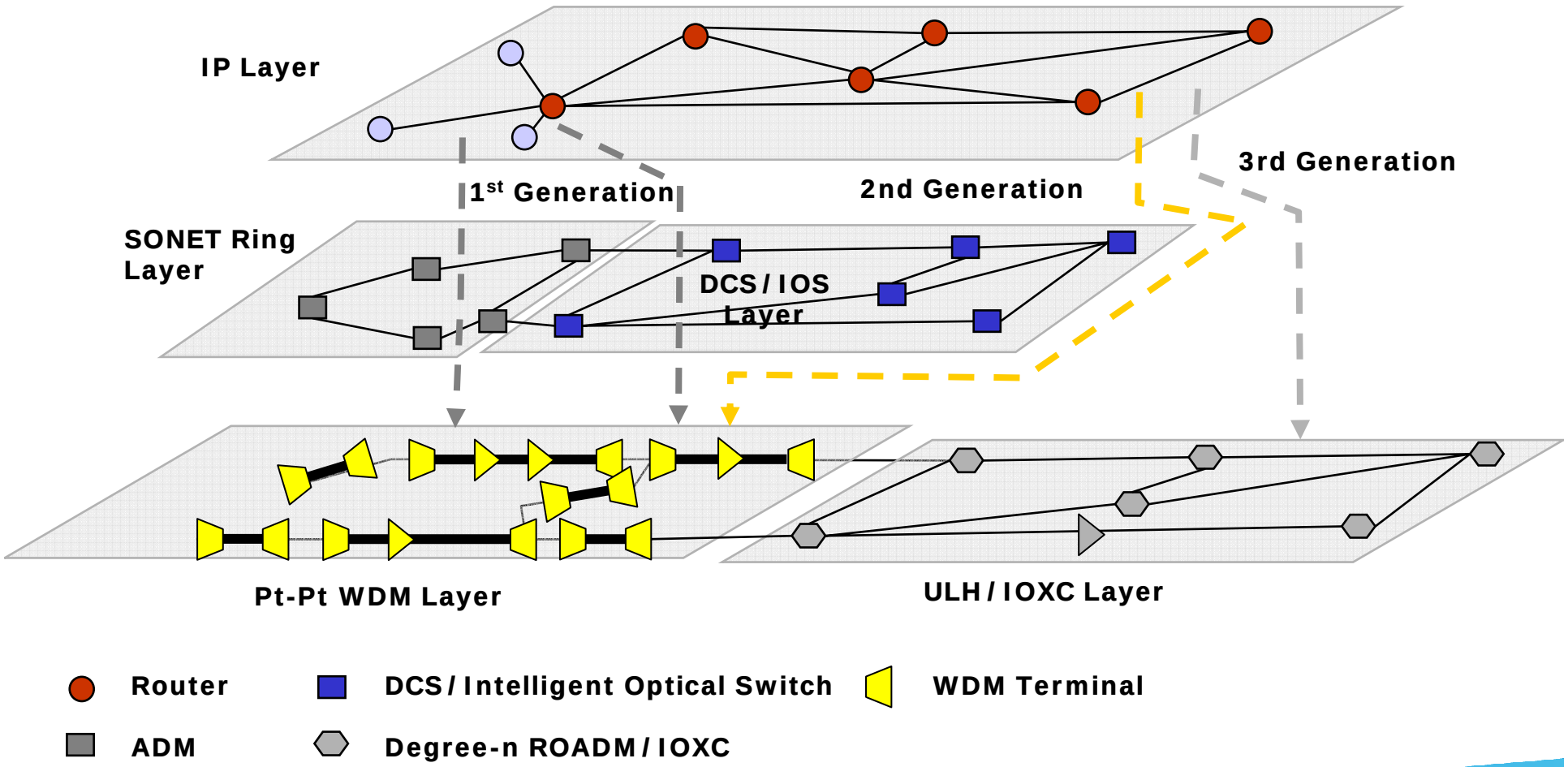

DWDM Transport Systems

LH Pt-to-pt system:

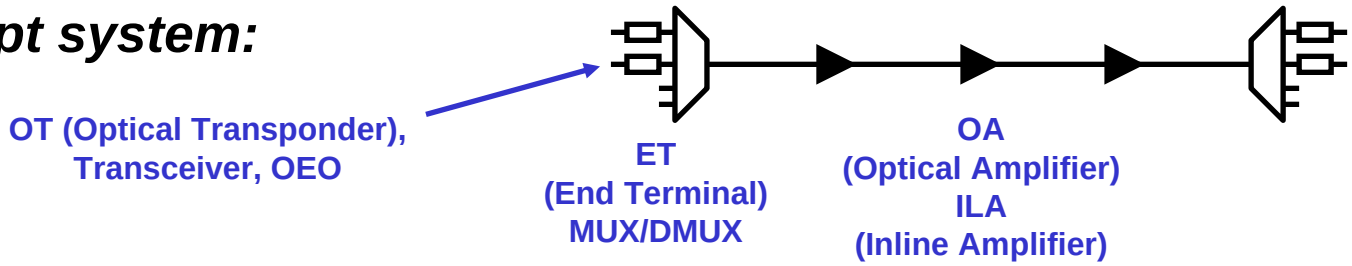

LH Pt-to-pt system with OADMs :

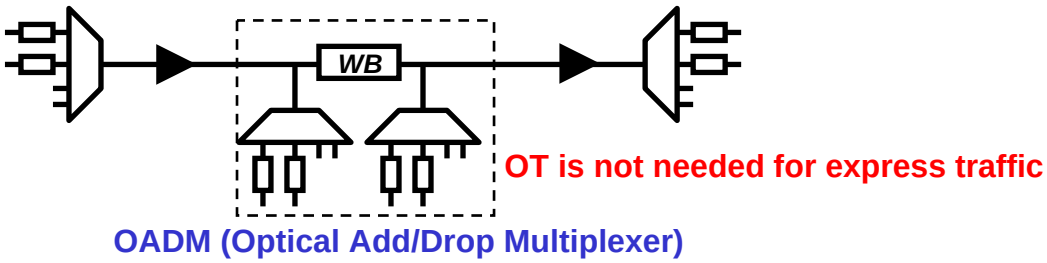

ULH with degree-2 or higher ROADM:

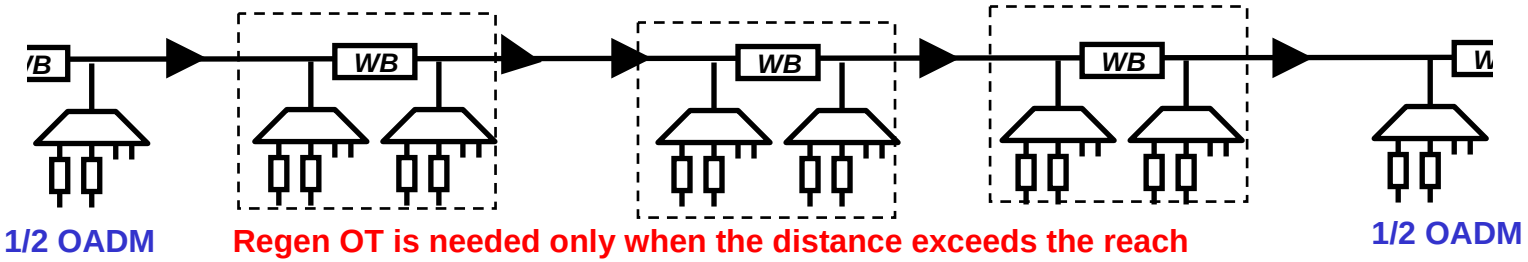

ULH System Evolution

- Early point-2-point ULH systems

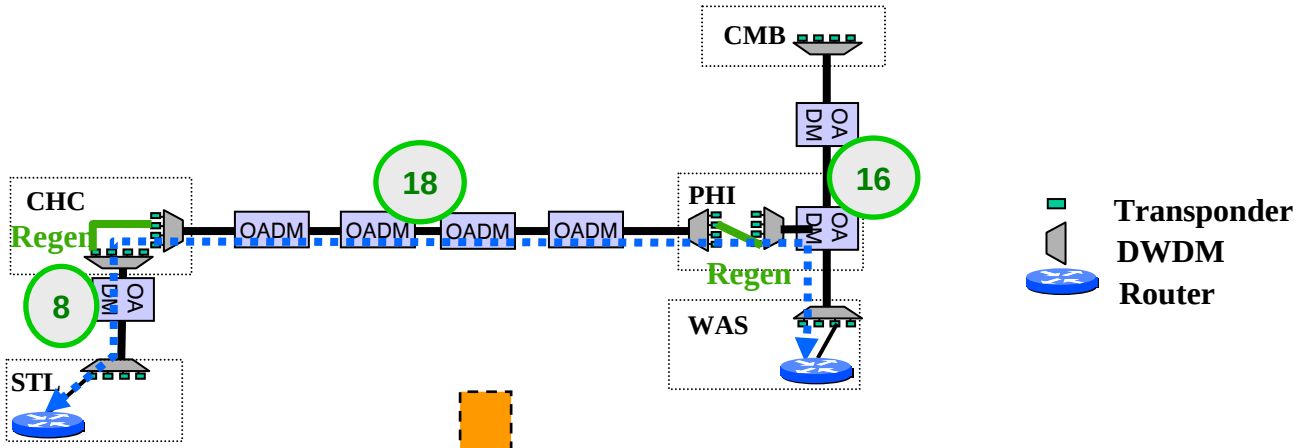

- *New IOXC Network*

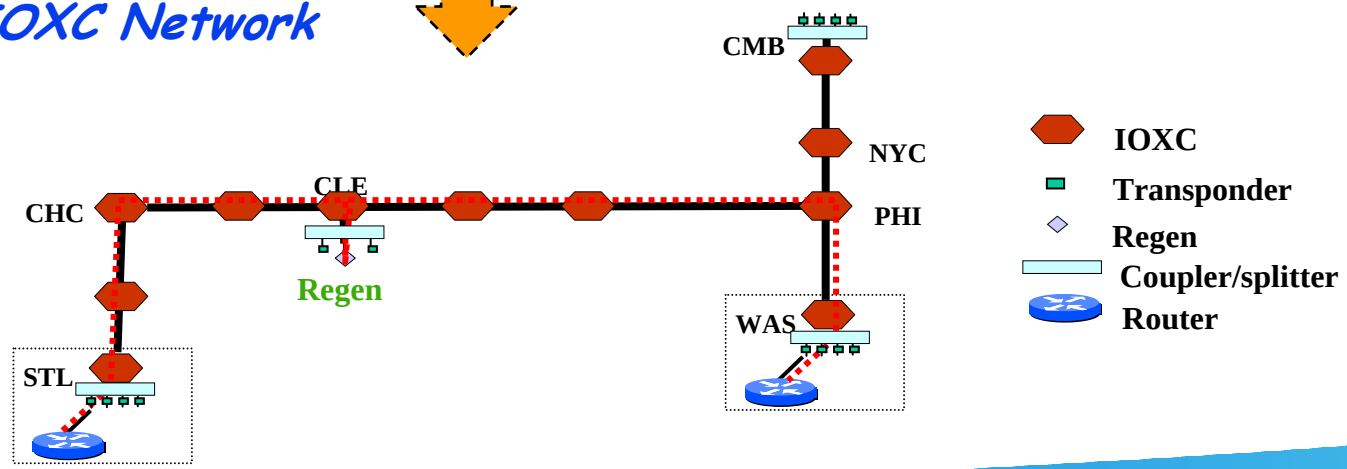

Sample IOXC Architecture: Broadcast and Select

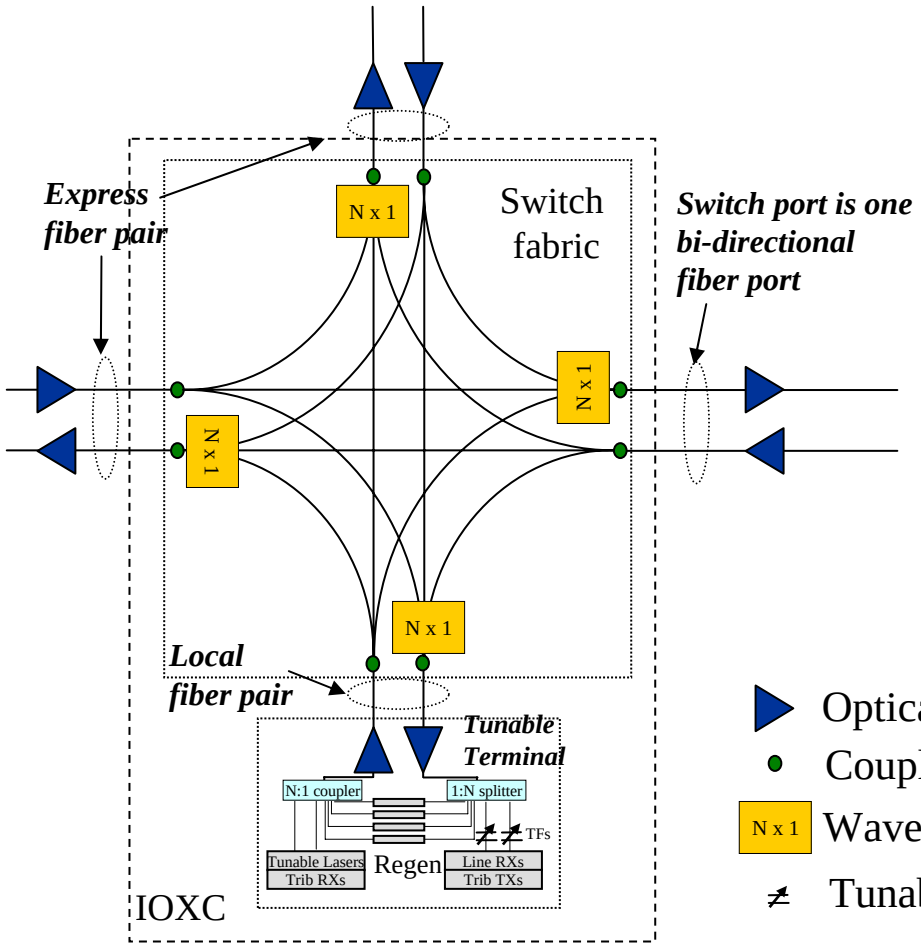

- General degree-n ROADM
- Optical wavelength switching between fiber ports
- Local A/D to/from any of the express fiber pair
- Wavelength constraint
- Integrated with the DWDM system -> transmission issues

Optical Amplifier

Coupler/Splitter

N x 1 Wavelength Selective Switch

Tunable Filter

IOXC-based Network Architecture

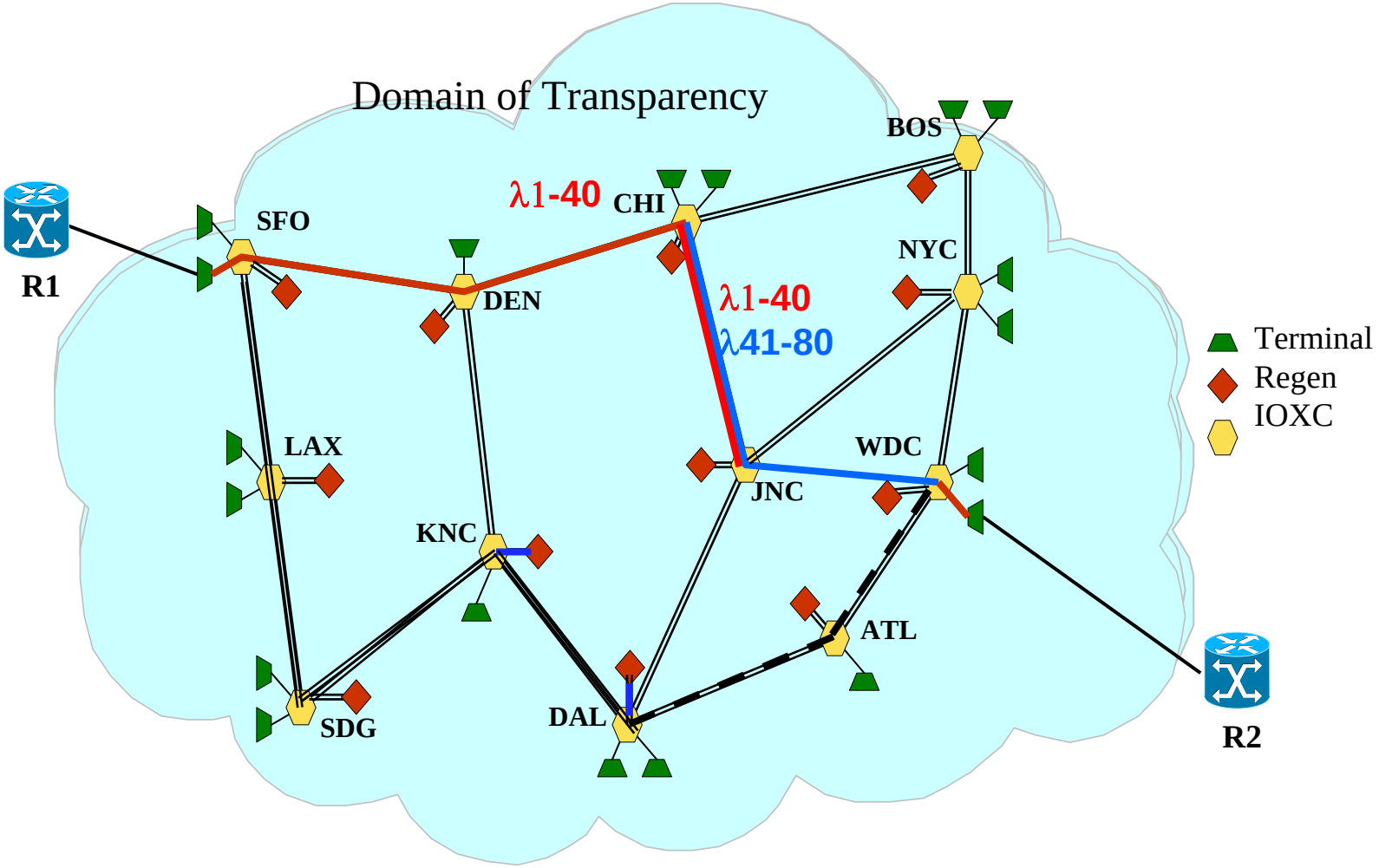

Restoration Architecture of All-Optical Networks

- **1+1 Protection: fast and simple, but very costly**
- **Shared Mesh Restoration (SMR)**
  - In an opaque optical network (e.g., CNI network), restoration connections can be dynamically set up after a failure has been detected.
  - In an all-optical ULH mesh network, setting up a large number of connections after a failure (e.g., a fiber cut) often takes 10's of seconds to a few minutes, which is not acceptable for most restorable services
    - Feedback control loops (segments of a few amplifiers) are used to equalize power difference across all channels. Each segment cycle usually takes a few seconds to complete.
  - Proposed solution: hot standby restoration architecture

SMR with Hot Standbys

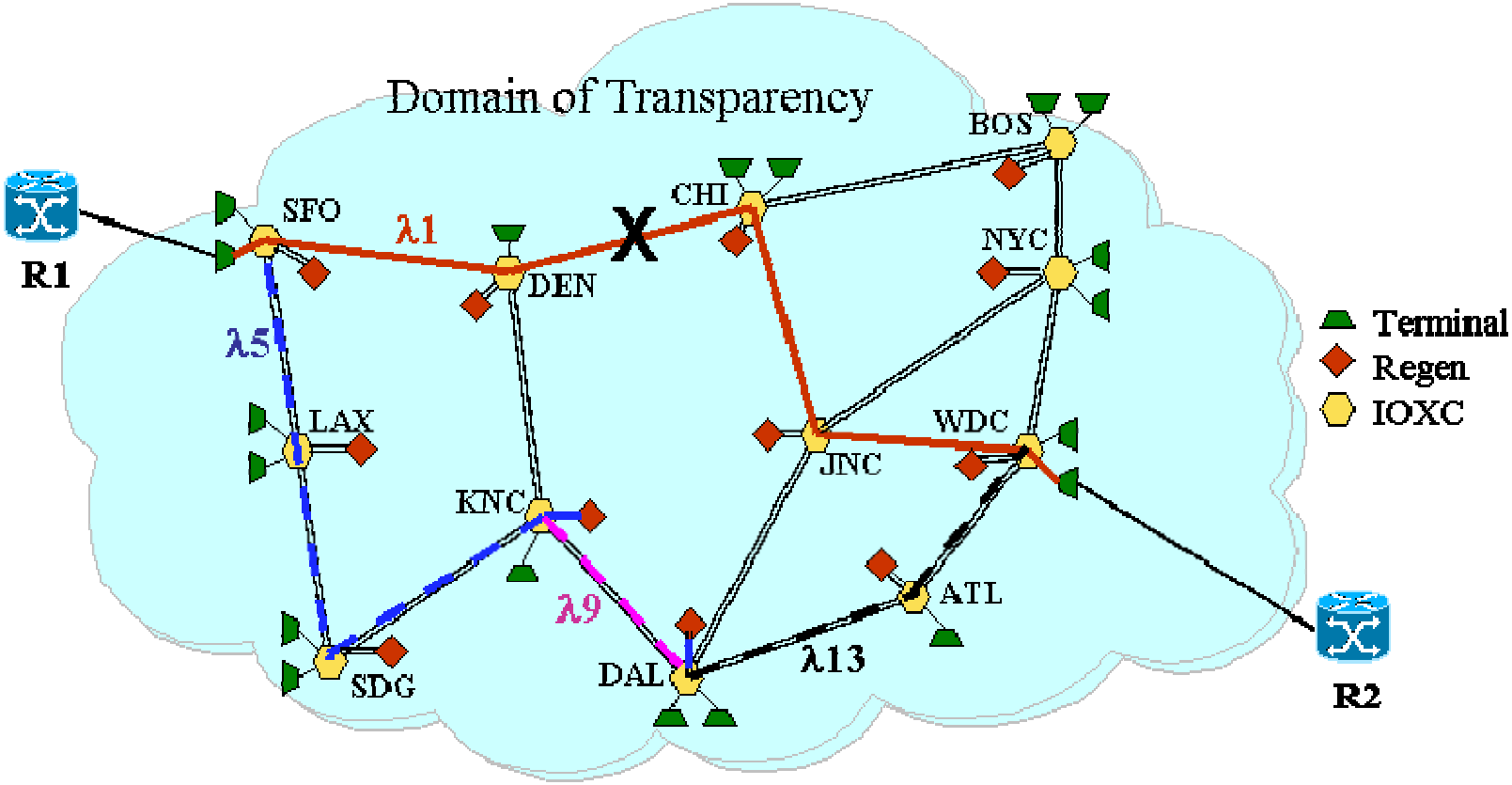

•Pre-establish hot standbys using a bank of regenerators to ensure that power equalization process has been settled at near-optimal level;

•Upon failure, dynamically connect a sequence of hot standbys to form a restoration path using switching and tunable OTs and regen.

•Proposed hot standby setup: connect all pair of nodes that are within reach with hot standbys

Restoration Choices of IOXC Network

- **1+1 Protection: rapid protection**
- **Shared Mesh Restoration (SMR)**
  - Hot standby: fast restoration, more regens
    - Pre-establish hot standbys using a bank of regens to ensure near-optimal power equalization;
  - Cold standby: medium restoration and regens
    - eliminate the regens at each of the end offices but some standby segments won't be "on" all the time
  - No standby: slow restoration, few regens
    - Share restoration regens at each IOXC for all restoration paths

With existing fibers, the major cost considered here is OEO regens

Hot Standby Restoration

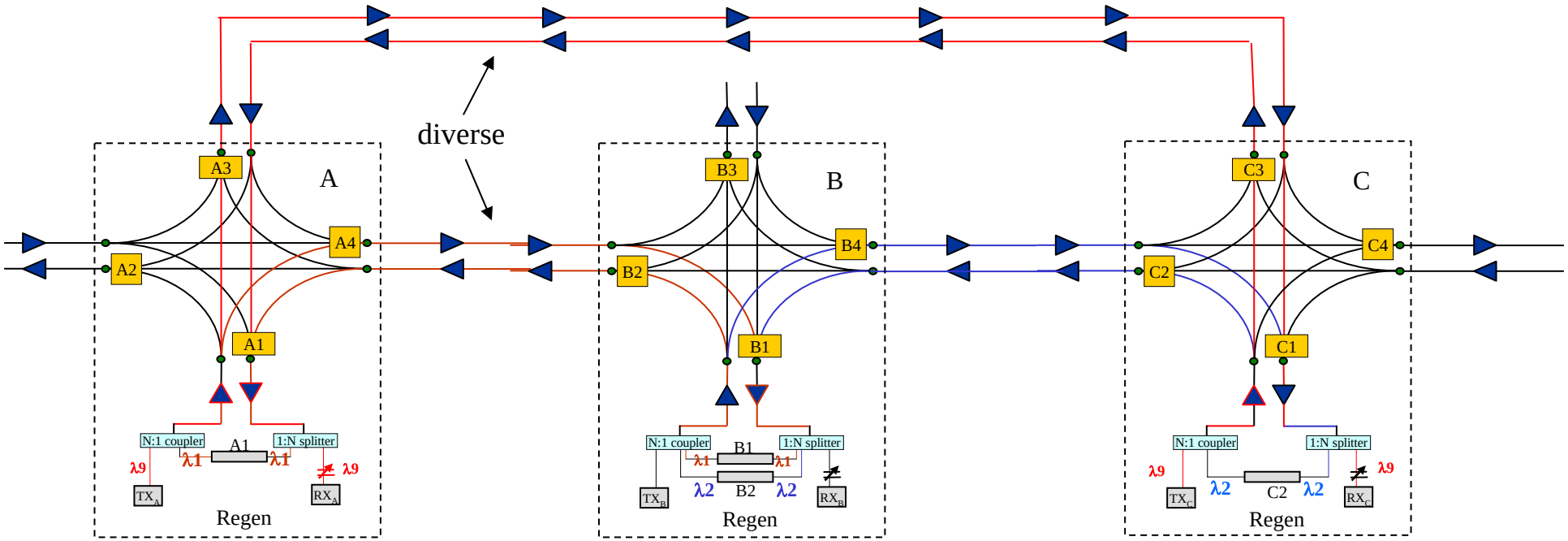

- During normal operation, an OC192 between A-C is carried on λ9 through the direct fiber A-C.
- Two hot standbys A-B on λ1 and B-C on λ2 are per-established using regen cards A1&B1, B2&C2 respectively
- When a fiber cut occurs on fiber A-C, a new connection on the restoration path A-B-C needs to be established using the two hot standbys

Cold Standby Restoration

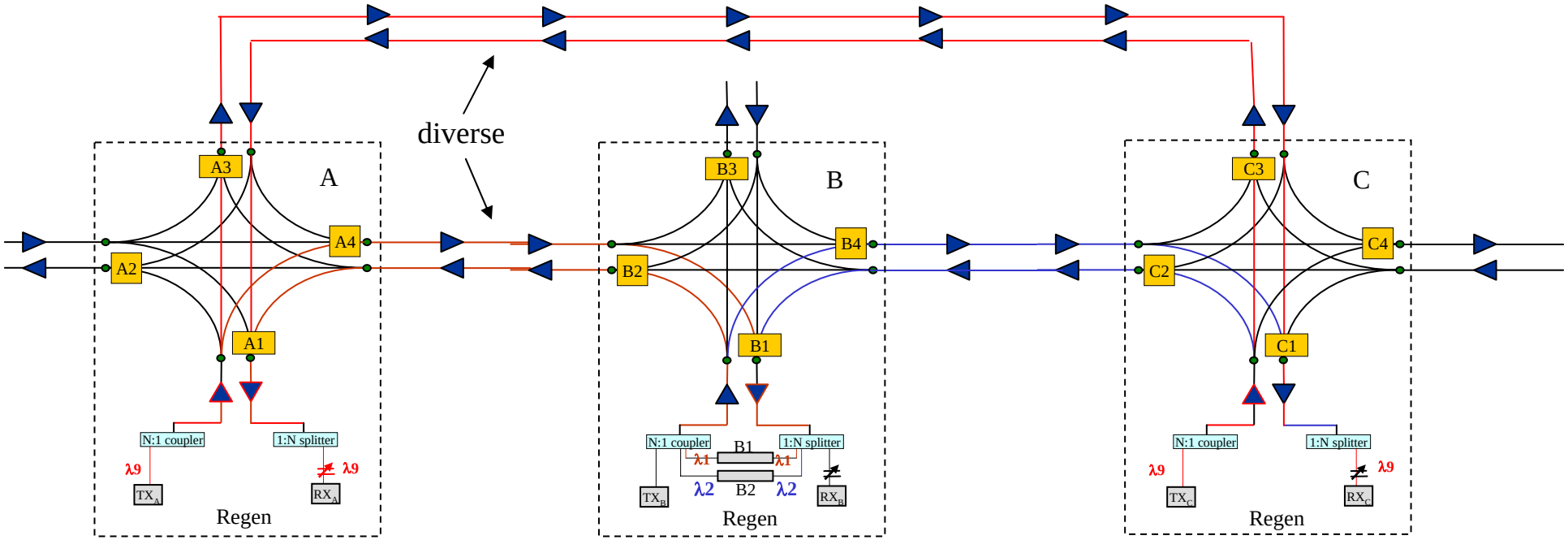

- Eliminate the standby regen cards, A1 and C2, in the two end offices.
- In the event of a failure, tune the two original end transceivers TX_A/RX_A and TX_C/RX_C, to the same frequencies on the corresponding standbys, $\lambda 1$ and $\lambda 2$.
- Regens B1 and B2 are dedicated to standbys AB and BC.

Cold Standby Restoration

- The cost savings of having cold standbys can be significant compared to hot standbys.
- One can improve the power equalization convergence process by using a testing regen card at each end office to send and receive testing signals periodically on all the cold standbys that terminates at that office using the corresponding wavelength.
- In order to compensate for the non-optimal equalization state with certain margin, one can design the cold standbys such that they are relatively shorter than the ultimate ULH reach.

No Standby Restoration

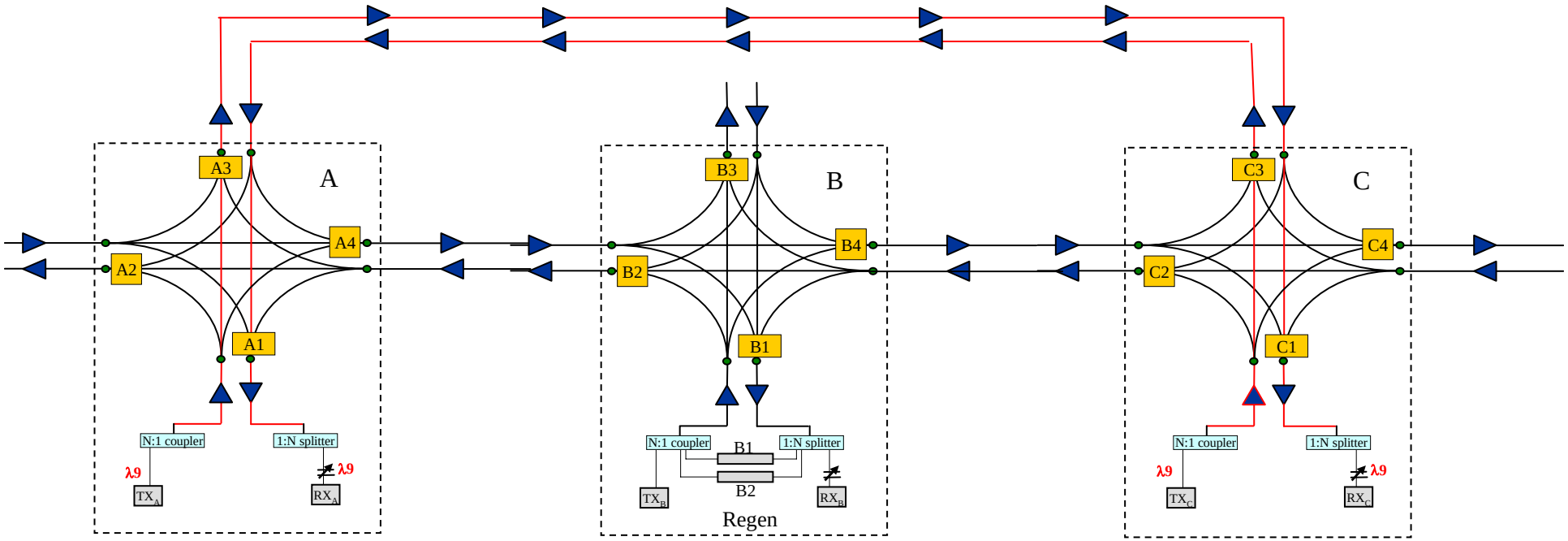

- No pre-establish standbys AB and BC
- The regens B1 and B2 on IOXC B can be shared for any restoration paths passing B.

Restoration Scheme Comparison

	Speed	Cost
1+1	No interruption	Most expensive
Hot standby	fast	expensive
Cold standby	slow	cost-effective
No standby	slowest	Most cost-effective

Simulation experiments

- **Network 1**
  - A US LH DWDM network with 80 IOXC's, 92 links -- an average nodal degree of 2.3.
  - 350 lightpath demands
- **Network 2**
  - A hypothetical US long-distance network with 28 nodes and 45 links -- an average nodal degree of 3.2.
  - 378 lightpath demands

Results from Network 1

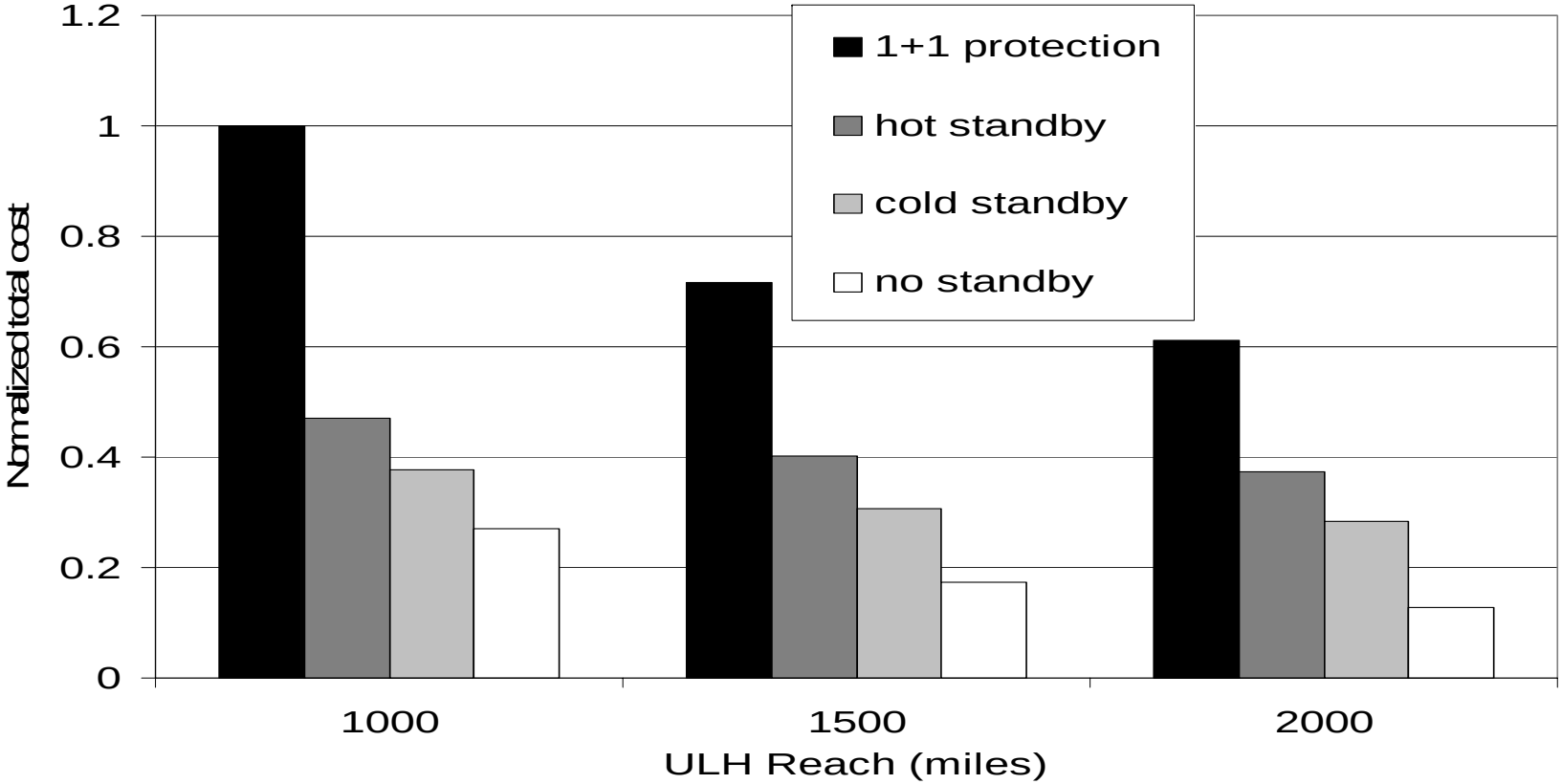

The advantage of SMR decreases as ULH reach increases

Results from Network 2

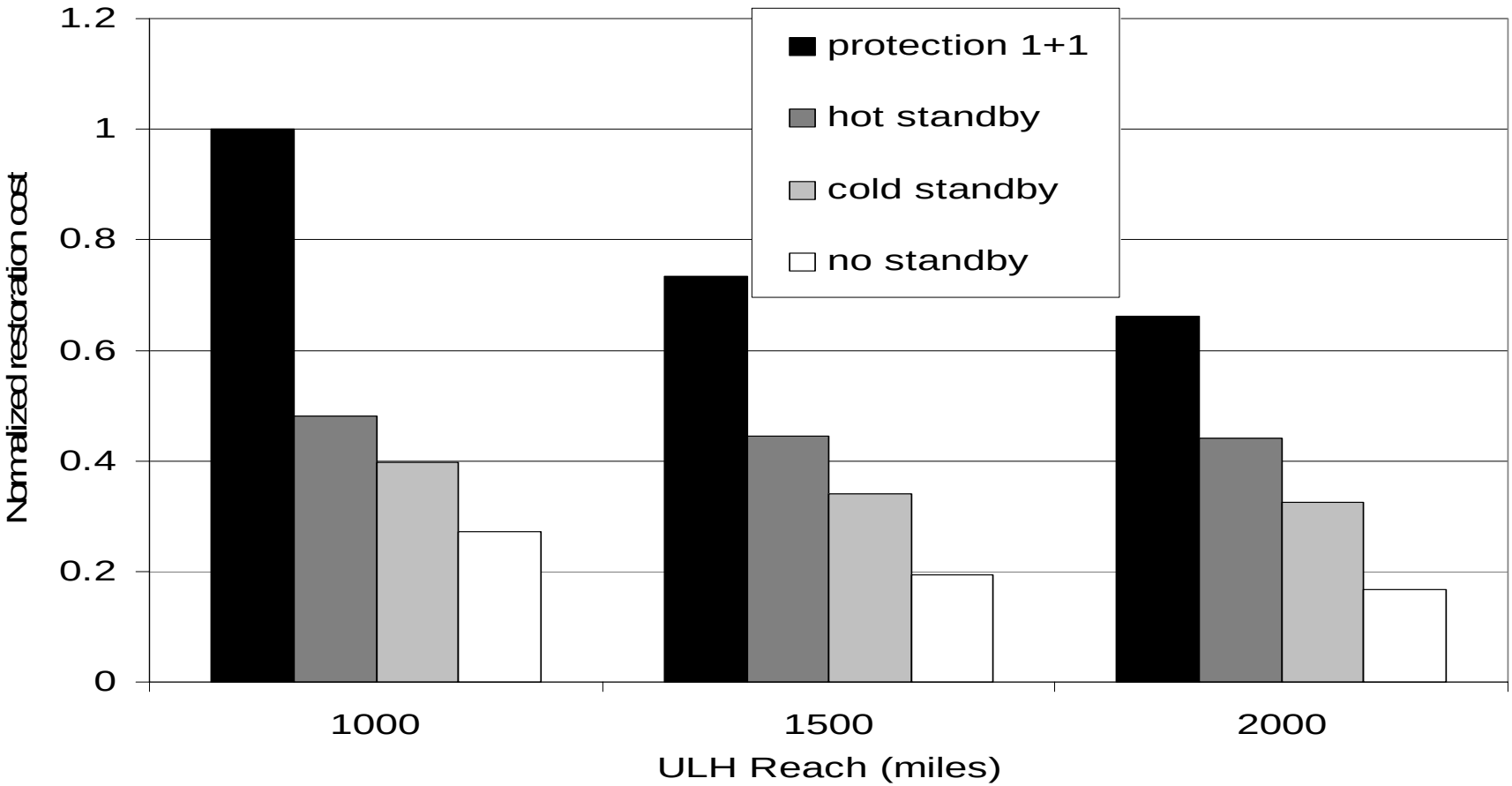

The advantage of SMR decreases as ULH reach increases

Conclusions

- Studied four recovery schemes in all-optical ULH mesh networks
- Proposed three different shared mesh restoration schemes that vary in cost and restoration speeds.
- 1+1 protection is the most expensive of the alternatives, particularly when ULH-reach is relatively short.
- The hot-standby scheme is much less costly than 1+1 due to wavelength/regenerator sharing.
- Both cold standby and no standby schemes are able to reduce the restoration cost from hot standby scheme but with the potential penalty of longer restoration time due to the power equalization convergence process.
- A qualitative comparison of restoration times indicates that 1+1 should be fastest, followed by hot standby, then cold standby, and finally no standby.