The Development of New Generation of High Speed Network in China-

The Future Development of 3TNet

Prof. Wang Binqiang

Chief-engineer of National Digital Switch Center (NDSC)

Outline

- The Trend of IPTV
- Issues of Current Internet
- High Speed Network Development Plans
- The Proposal of China's 3TNet
- The Innovations of 3TNet
- Current Achievements of 3TNet
- Trend of Future Network and Services

Overall Trend of Global Communication Services

- Two aspects are stressed for services
  - Provide high quality, personalized communication service
  - Provide ubiquitous service
- Network traffic has trends of mobility, broadband and multimedia
- Many developed countries see the fundamental effect of high speed communication network on an information society and sustainable development

Traffic's Composition is Changing in China

- **Data traffic(especially IP traffic) has an obvious impact on PSTN voice traffic**
  - Backbone traffic has a growth of 260% in the past 3 years; IP traffic in 10 times great than voice traffic in the third quarter of 2005
  - IP traffic occupies 90% of the bandwidth
  - Hopefully, backbone bandwidth will be growing at a rate of 80% 5 years
- **Mobile network is replacing wired network**
  - Oct 2003, mobile users began to be preponderant over wired network users
  - Feb 2005, mobile traffic occupied 80.28 of total revenue
  - The number of mobile calls is close to that of wired network and mobile call durations is longer

Major IP traffic is video stream media

- **Simple calculation**
  - If video stream media(IPTV, VoD) users grow from 0.01% to 1%, their traffic will grow from 9% to 90%
- **Two Inferences**
  - Video stream media traffic is preponderant in IP traffic
  - If the network solves IPTV problem, it solves other traffic problems
- **IPTV is the major drive behind broadband market**

The Global Trend of IPTV

- Strategy Analytics predicted that: IPTV user number will be over 20 million in 2008

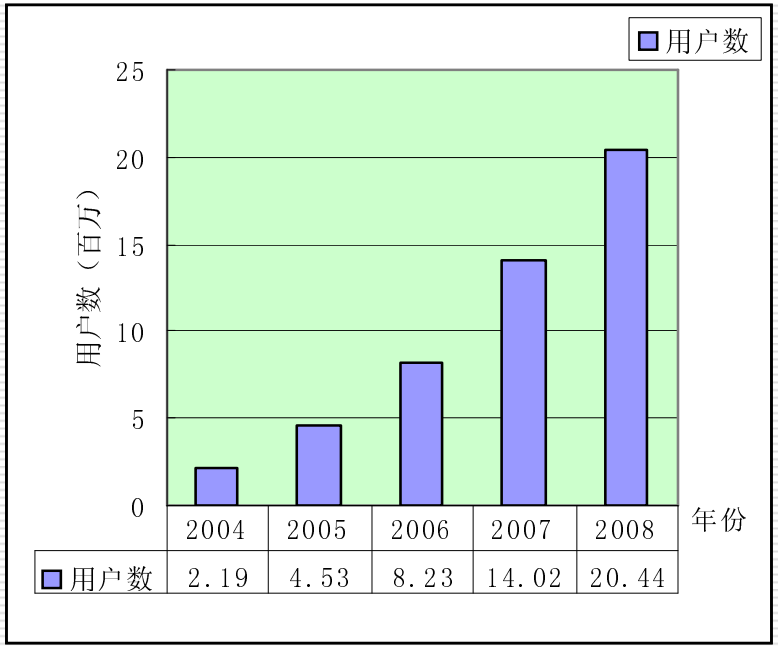

IPTV user number growth

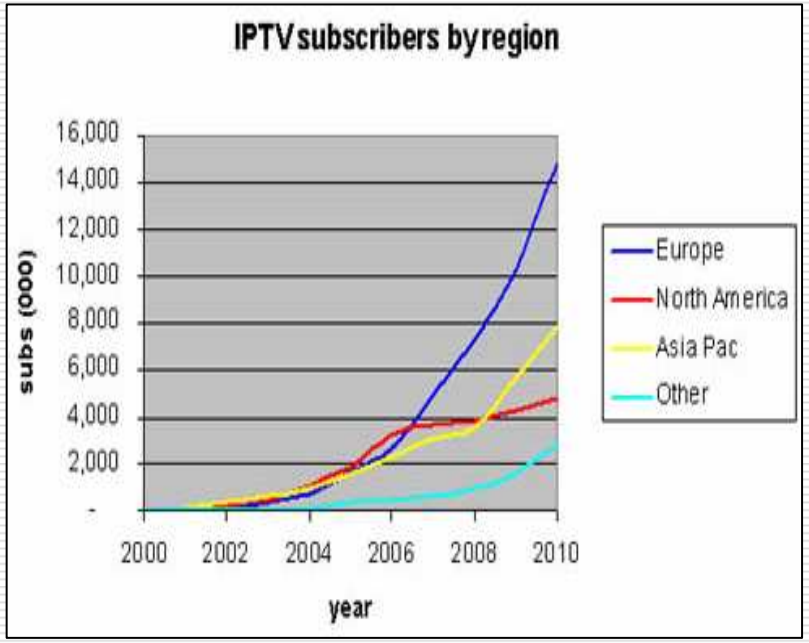

Global IPTV user growth

Factors that affect IPTV development

- According to China Telecom, factors that affect user's decision to buy IPTV service: content, price, image quality, network quality
- **User's requirement on content**
  - Majority of VoD should be movie and TV
  - Information service should include sports, financial report and lottery information
  - Interactive game should be recreational and intelligent
  - remote education should include fashion, cooking and occupation education, etc.
- **User's requirement on terminals**
  - Prefer TV + Set-top Box
  - Current Set-top Box's quality and appearance is not good
- **User's requirement on network**
  - Start-up speed, network stability and channel switching time problems

Anatomy of IPTV System

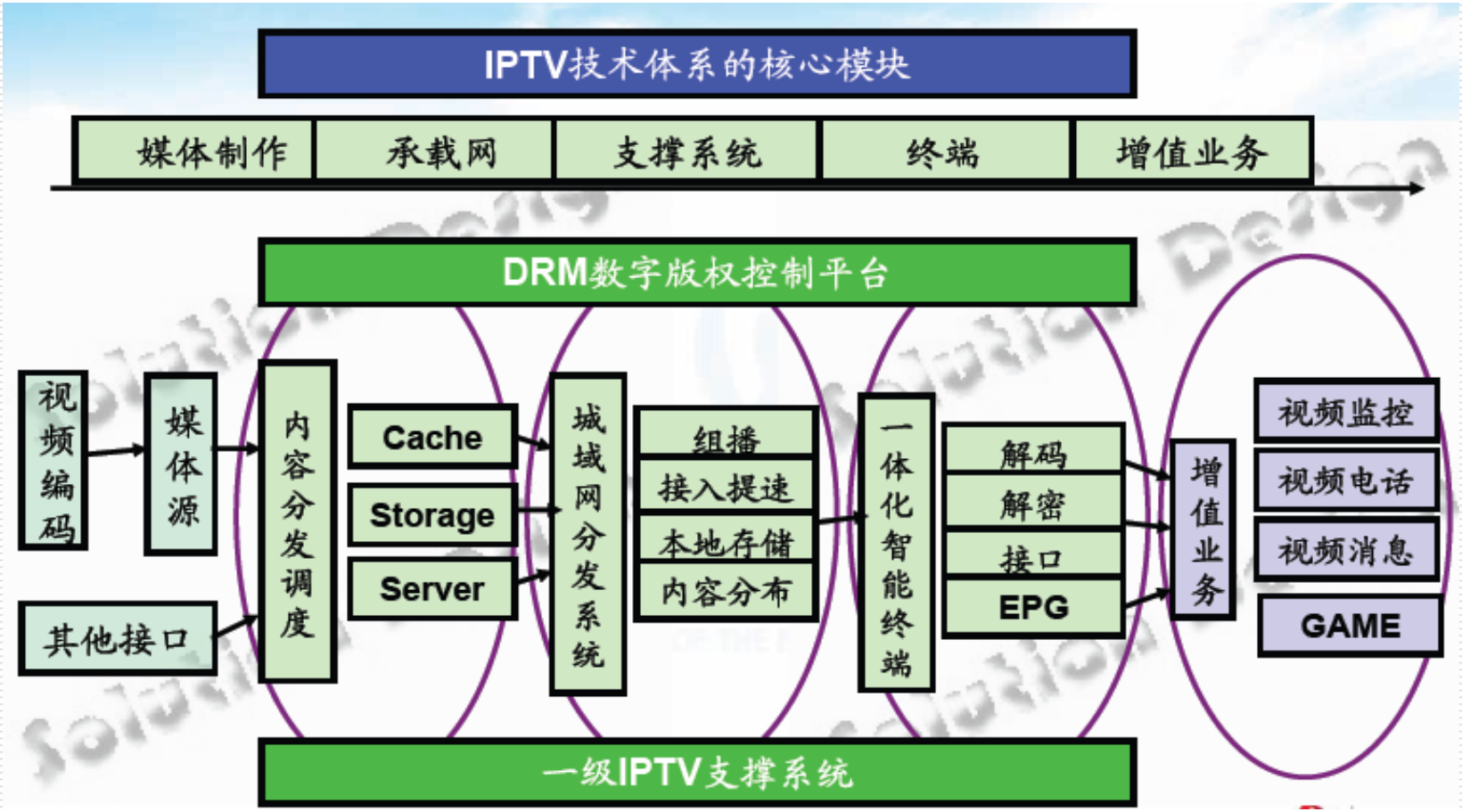

An ADSL-based IPTV Solution

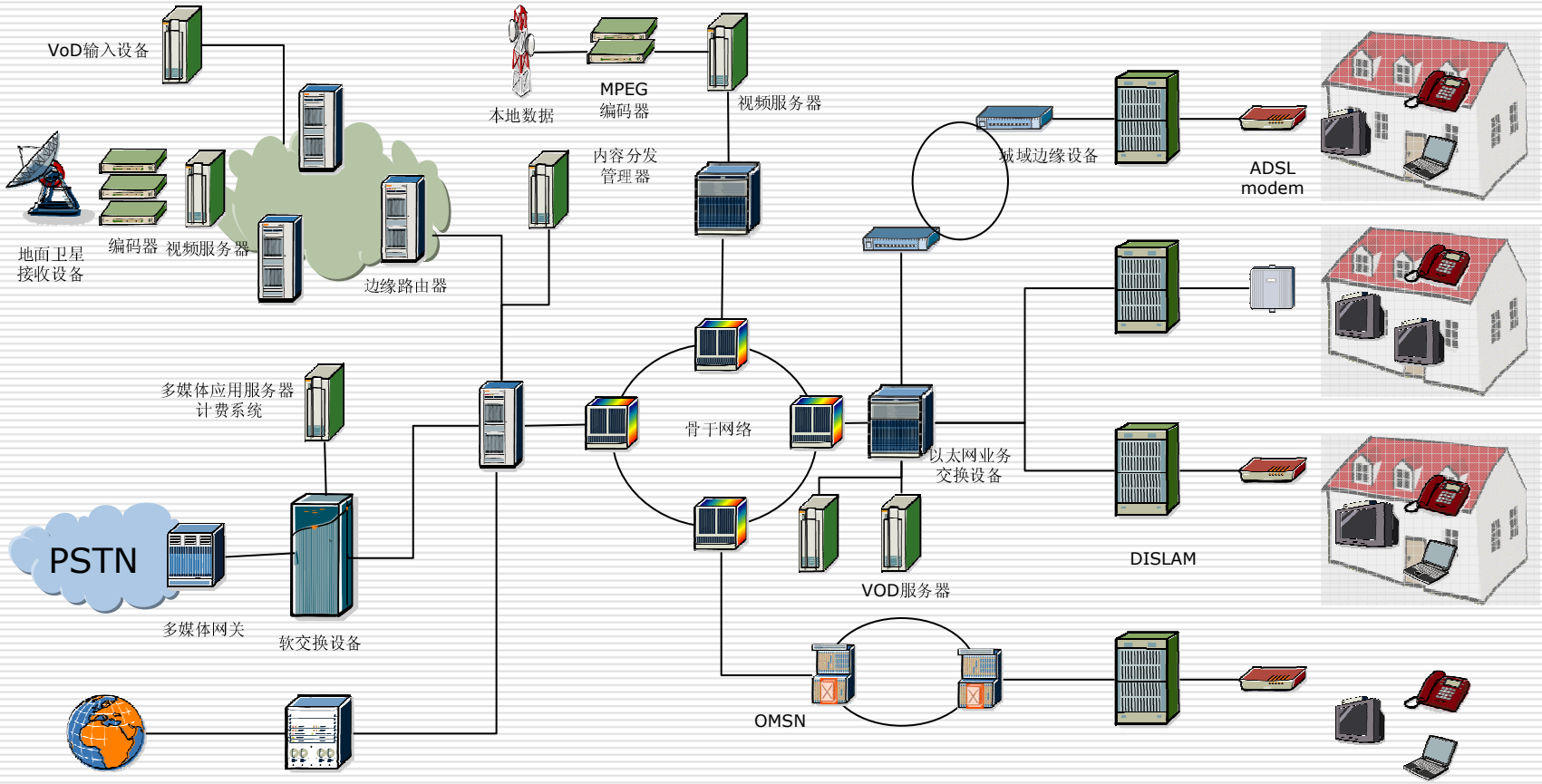

Outline

- The Trend of IPTV
- Issues of Current Internet
- High Speed Network Development Plans
- The Proposal of China's 3TNet
- The Innovations of 3TNet
- Current Achievements of 3TNet
- Trend of Future Network and Services

Characteristics of video stream-media traffic

- **Compared with traditional IP traffic(FTP, HTTP, Telnet, Email), video streaming media(IPTV, VoD) costumes much more bandwidth**
- **The nature of stream - demand a connection oriented network**
  - Datagram is timely ordered
  - Datagram must arrive in time subject to constraints
  - Datagram loss must be small
  - Continuously occupy bandwidth during transmission

The fundamental drawback of the Internet

- The philosophy of Internet is "best effort"
- IP is a pure packet switching system
- No guarantee of end-to-end QoS(bandwidth, packet loss, delay)
- Internet that is interconnected by IP routers is no predictable, and too complex
- Current QoS protocols, such as DiffServ, IntServ, MPLS, try to solve the QoS problem but fail to solve this problem fundamentally

Seeking a New Network Architecture

- Streaming media demands that new architecture is of connection-oriented virtue
  - demand bandwidth occupy and stable flow rate
  - demand large-scale concurrency and multicast
  - demand burst data access
- IP is inevitable at edge where users access
  - The openness of IP(heterogeneous sub networks, global address, transparency)
  - Allow different terminals to access network (ubiquitous access)
  - Multiplexing different traffics

Outline

- The Trend of IPTV
- Issues of Current Internet
- High Speed Network Development Plans
- The Proposal of China's 3TNet
- The Innovations of 3TNet
- Current Achievements of 3TNet
- Trend of Future Network and Services

High Speed Network Plans in U.S.

- **NGI，Internet2**
- **100×100 Research Plan**
  - Main target: Sponsored by NSF, proposes that 100 million families access internet at 100Mbps, and solving end-to-end QoS
  - Design concept: A new network architecture, no backward compatibility
  - Tasks: Stressing over ubiquitous access, economy, anti-attack and easy management besides bandwidth, delay, jitter and security

High Performance Network Plans in Europe

- Main target of e-Europe2002 is broadband access
- e-Europe2005 concerns traffic, application and content. It provides broadband and secure architecture, suggests contemporary online public service(e-government, e-learning, e-health), e-commernce and application support framework(ubiquitous accessible bandwidth and information security)

High Performance Network Plans in Japan

- Japan‘s strategic plan aims to realize broadband environment in 2003
- June 2004, Japan proposed U-Japan to develop an ubiquitous society, hoping to build an "anytime, anywhere, anything, anyone" accessible network with four targets
  - realize a society in which anytime and anywhere network is accessible
  - realize a society in which we can create continues commerce and service
  - realize a society in which anyone can live a secure life
  - realize a society with vitality
- Japan government predict that U-Japan relate market will sum up to 87.6 trillion and have an impact of 120.5 trillion on Japan economy

A new network architecture is a strategic choice

- **Strategic choice of developed countries**
  - Consider the next generation network architecture as a way to improve competitiveness and economy
  - Highly stressed over the development of communication network and service in constructing an information society

Outline

- The Trend of IPTV
- Issues of Current Internet
- High Speed Network Development Plans
- The Proposal of China's 3TNet
- The Innovations of 3TNet
- Current Achievements of 3TNet
- Trend of Future Network and Services

The origin of 3Tnet

- 3TNet is the abbreviation for the high performance broadband information network. It is a national class project under the sponsorship of the 863 Plan
- The 8th File from State Council stated: it must be innovative, pioneering, open and illustrative with a focus on new network products and traffics. We must make our own Tbps level routers, switches, transportation devices and supporting environment. We must build a test bed to promote economic development and make ourselves top ones among those countries that developed new generation high performance communication network

The target of 3Tnet

- Independently develop Tbps network devices. Develop an operable network that supports large-scale concurrent stream media traffic and interactive multimedia traffic.
  - Technology target: independently develop Tbps optical transportation system, ASTN, IPv4/IPv6 dual-stack routers and corresponding supporting environment
  - Network target: Promote local operation of companies and government of this network with these Tbps network devices. Build a practical, manageable, operable, wide-area high performance network
  - Application target: On the basis of broadband streaming media traffic and interactive multimedia traffic, develop various streaming service and value-adding service

Development of 3TNet

- Based on the principle of traffic driven network evolution, we study the overall architecture of 3Tnet(core and edge network)
- Study core network capacity to support streaming media traffic
- Study end-to-end QoS of access network(40Mbps)
- Take large-scale simulation and application to prove the architecture, technology, device, traffic and supporting environment of 3Tnet

Major Traffic in 3Tnet

- **Streaming media traffic:** IPTV or VoD
  - Use terminals such as [Set-of-top box + TV], computer to access 3Tnet and receive TV programs (including HDTV)
  - Select TV programs by EPG
- **Voice traffic:** VoIP
  - Use terminals such as telephone, computer to access 3Tnet for Voice over IP
- **Web traffic:** WWW，Email，FTP. E.g.
  - Web page browsing and email

Outline

- The Trend of IPTV
- Issues of Current Internet
- High Speed Network Development Plans
- The Proposal of China's 3TNet
- The Innovations of 3TNet
- Current Achievements of 3TNet
- Trend of Future Network and Services

Overall Architecture of 3Tnet

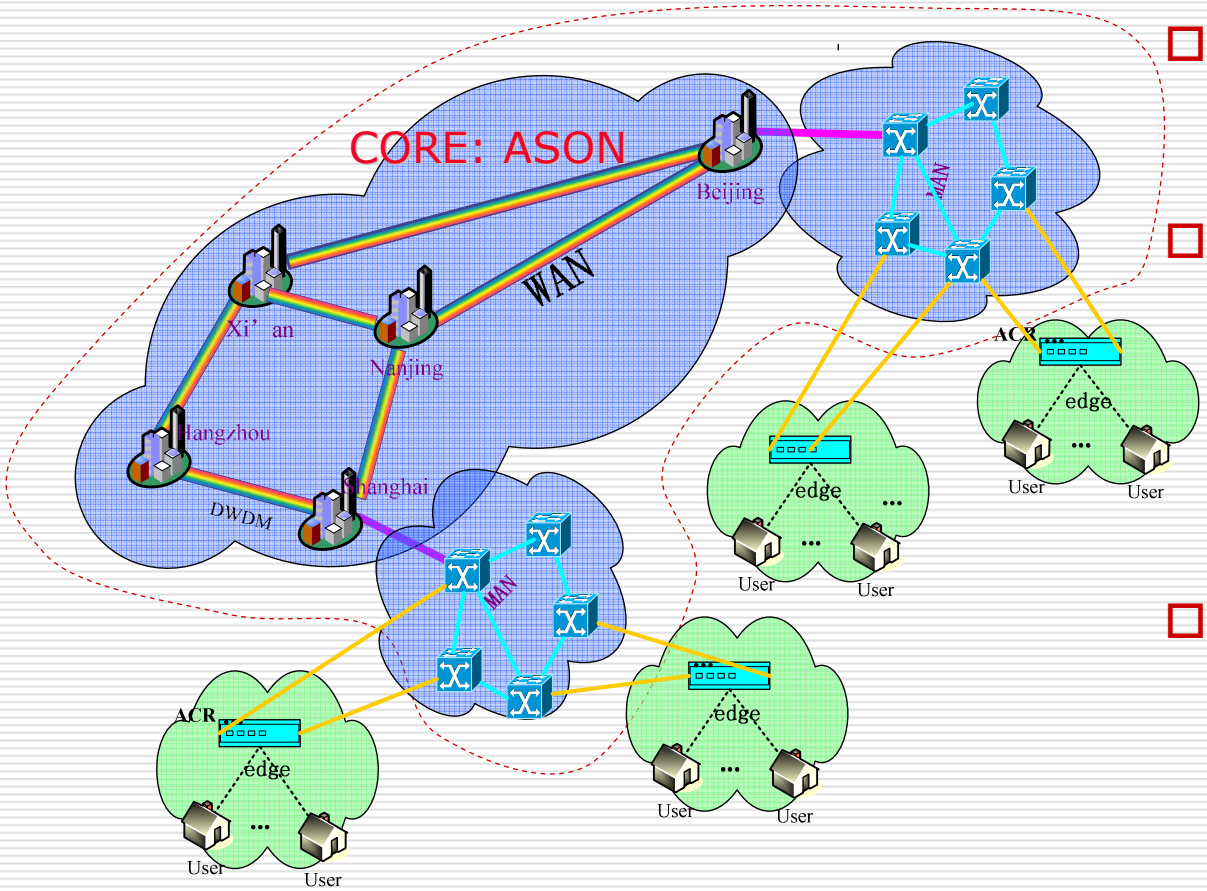

- Core network: ASON circuit switching
- Edge network: use large-scale convergence router ACR
- Basic feature: mix of circuit and packet switching

Core network of 3Tnet （ASON）

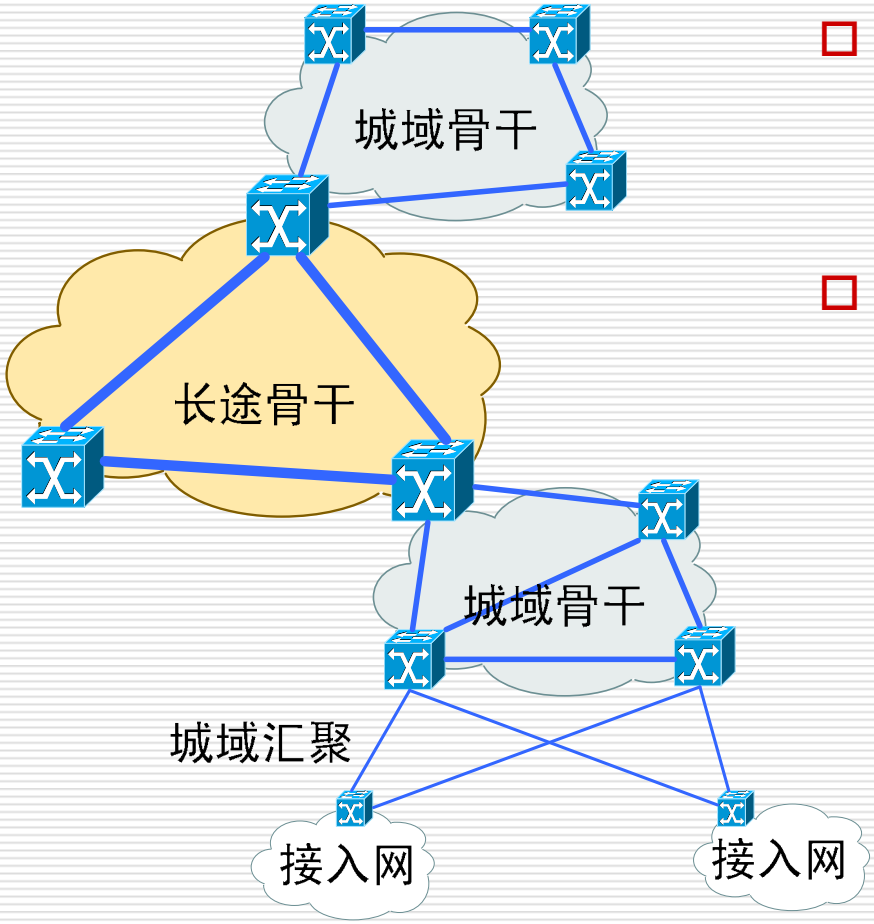

- **Shanghai—Hang Zhou：** 40Gbps based Tbps（DWDM）optical transporting system
  - **Support 80×40Gbps capacity**
- **Metropolitian network：** Tbps automatic switching transportation ASTN
  - Tbps switching capacity、multiple traffic access、dynamic resource allocation、automatic error recovery enabled (ASON) devices
  - Burst switching mode connection, multicast

Access Network of 3Tnet （ACR）

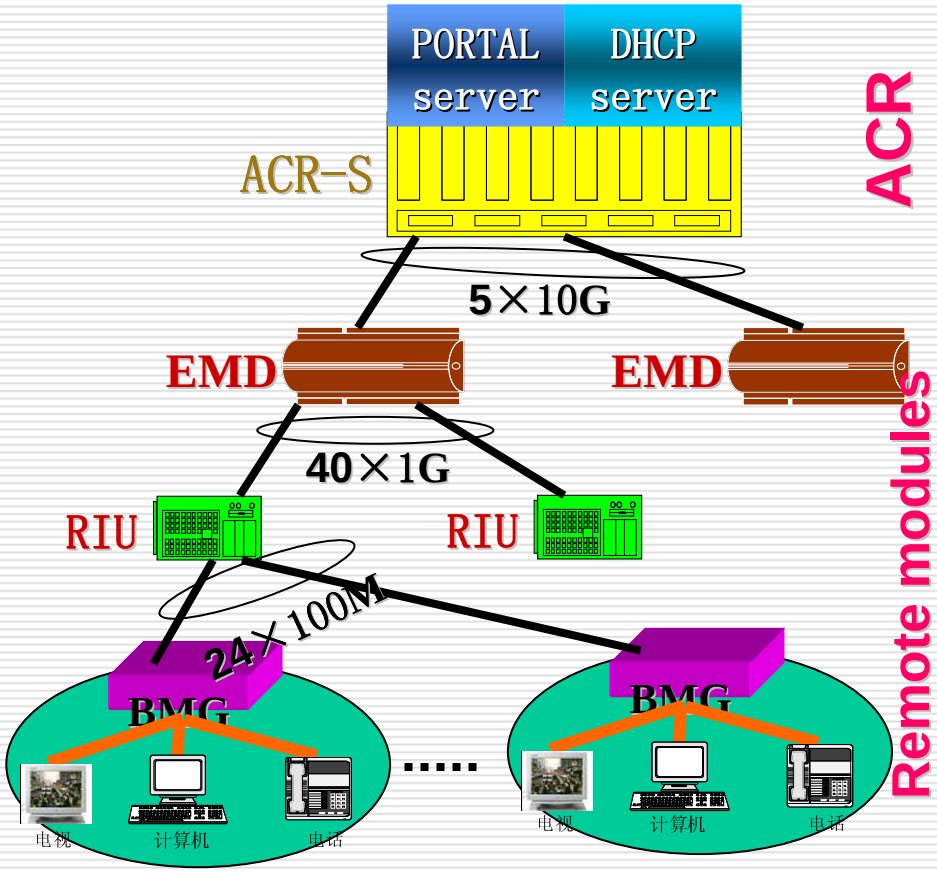

ACR

- ACR-S： ACR switching node
- ACR-Portal： ACR-Portal-server
- ACR-DHCP： ACR-DHCP-Server
- RM： remote module

Remote modules

- EMD ： Ethernet multiplexing device
- RIU： remote interface unit

Features of 3Tnet ACR

- Highly simplifies topology of access network(super-flat tree structure with 2 end-to-end hops), provides QoS guarantee and port traffic control
- support large-scale number of user ports(extensible to 60000)
- support second level segregation and third level access control, support integrated network management
- support IPv4/IPv6
- support 100 channels of DTV, maximum 30 channels of HDTV and 70 channels of SDTV with total bandwidth $\leqslant$ 1Gbps
- support IPv4/IPv6 controlled multicast tree in activated and hibernating mode, with number of multicast trees over 100. Switching time between multicast trees: less than0.75s under 75% circumstance; less than 1s under 85% circumstance; and maximum time is 1.2s
- support flow multiplexing based dynamic multicast tree. provide VoD traffic with dynamic multicast tree number over 2000 and flow multiplexing time less that 1 minute

863 3TNet实际部署的网络拓扑总图

Topology of 3Tnet

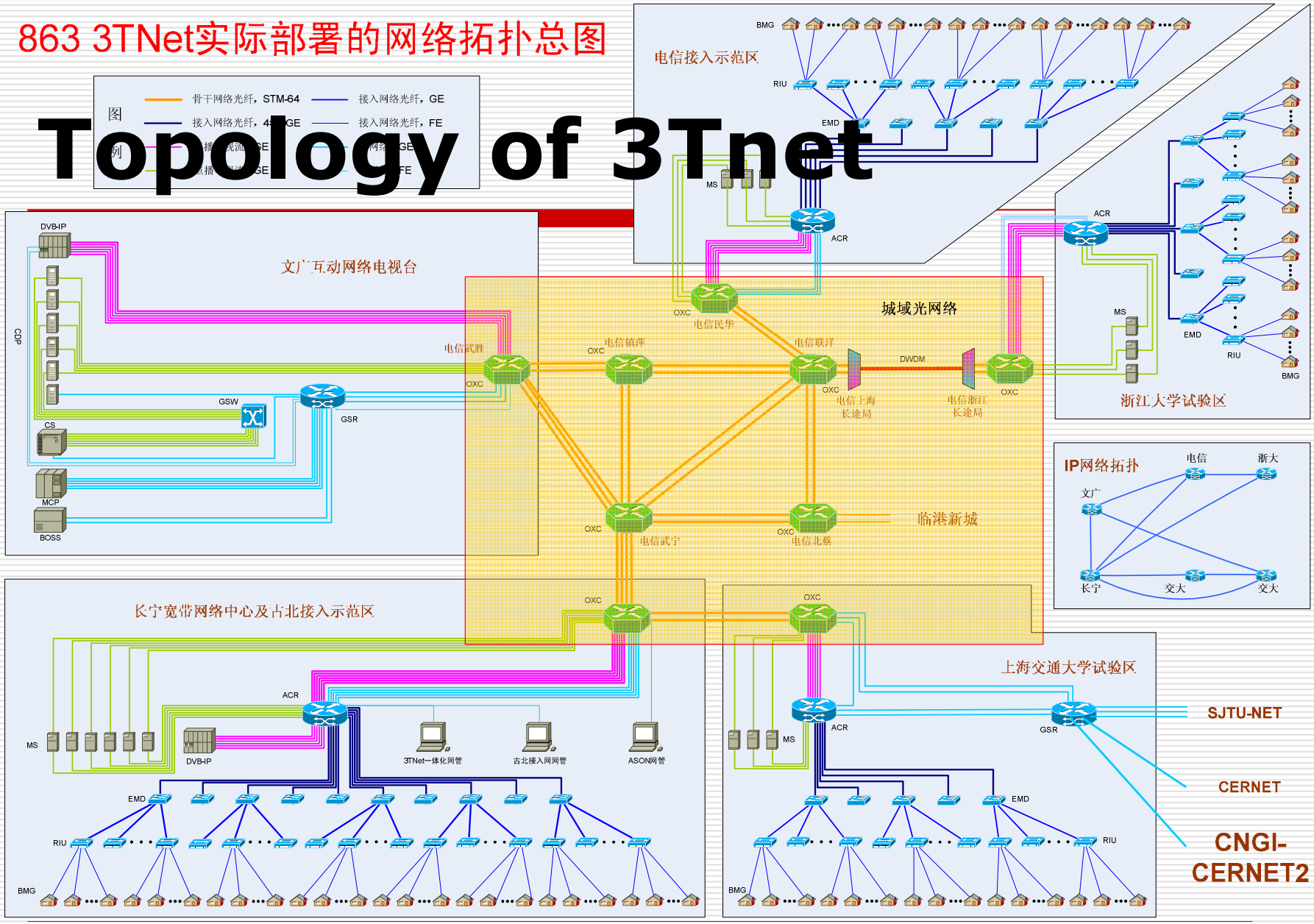

3TNet's support for IPTV

- IPTV distribution method
  - ASON multicast + IP multicast
- Performance standard：
  - 20000 IPTV users
  - 70 SDTV（6Mbps）
  - 30 HDTV（20Mbps）
- Major bottleneck
  - bandwidth

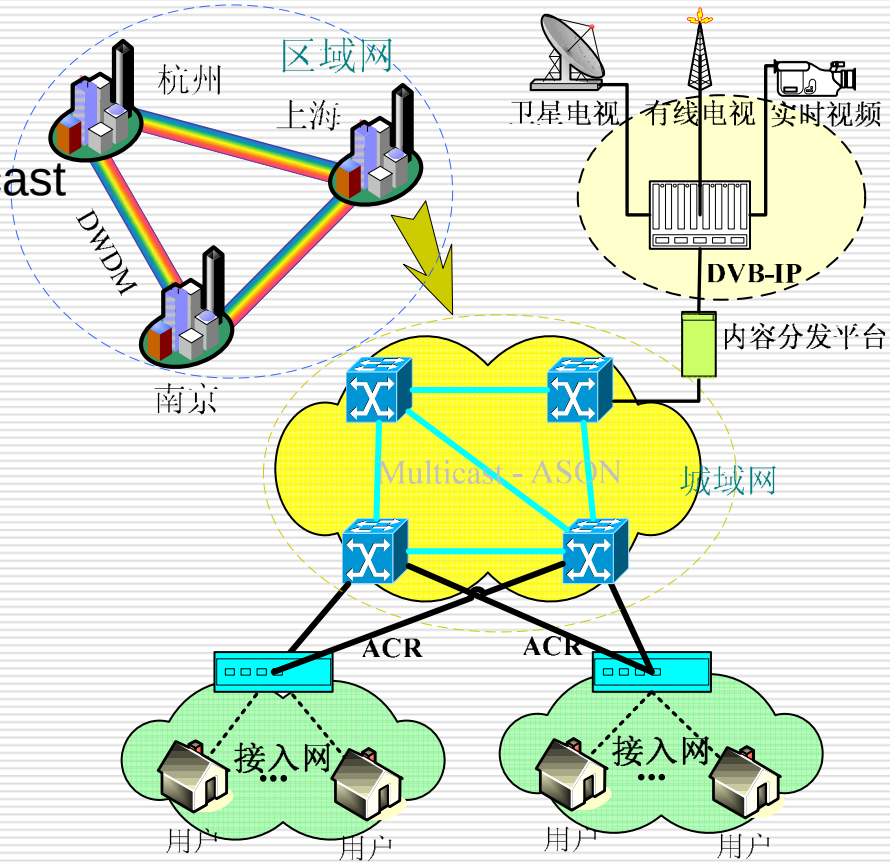

3TNet's support for VoD

- VoD distribution method
  - unicast
  - Multiplexing multicast
  - CDN framework：localize VoD traffic，reduce core network overhead
- Performance standard：
  - 2000 concurrent users
  - 100 programs
- Major bottleneck
  - bandwidth
  - Server capacity

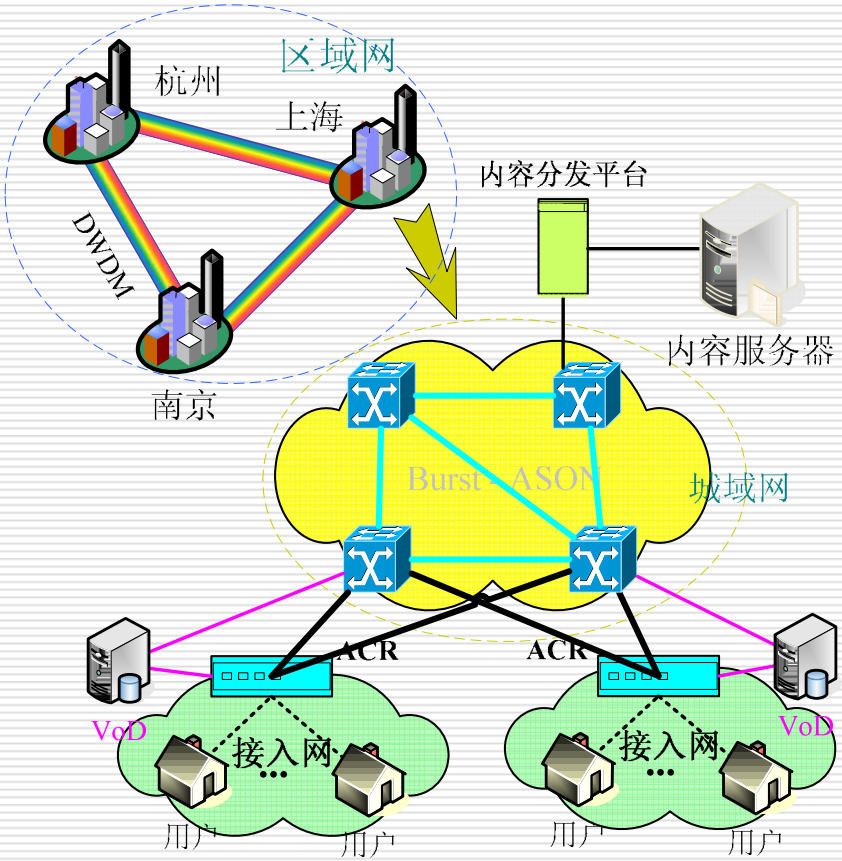

3TNet‘s Operational Environment

- From media forefront, media transport, operation guarantee, user access, to construct IPTV, VoD based integrated service platform
- To realize that user pays at one place and traffic operator, network operator, local network operator manage its own traffic independently

Key Tech of 3TNet to Support IPTV

- ASON link multicast ensures that IPTV is transported to ACR
- ASON burst connection ensures that VoD program is download to ACR
- ACR controlled multicast realizes IPTV user authentication and authorization
- ACR's large-scale multiplexing and switching capacity ensures 40mbps per user
- Intelligent content distribution improves system's overall performance and effectiveness
- support operation environment ensures system's manageable and operable

Outline

- The Trend of IPTV
- Issues of Current Internet
- High Speed Network Development Plans
- The Proposal of China's 3TNet
- The Innovations of 3TNet
- Current Achievements of 3TNet
- Trend of Future Network and Services

Results from 3TNet's

- **Tbps Transport**: The third open DWDM transport system extensible to 80X40
- **Tbps switching**: First metropolitan network based on ASON burst transport and multicast
- **Tbps routing**: Merge of circuit and packet switching, the implementation of ACR
- **IPTV traffic**: Real-time distributing metropolitan ASON and ACR which support IPTV
- **Large Scale Test bed**: Our Country's biggest IPTV(including HDTV) traffic test network - 20000 users with 40Mbps per user
- **Manufacturing Improvement**: Lead network technology innovation and standard making, forming a basis of IPTV market

3TNet's Application

- 2004, Shanghai Municipality started e-Shanghai Project, which will push 3TNet into applications
  - e-Entertainment
    - IPTV traffic in Zhabei District
    - Network games on 3TNet
  - e-Learning
    - Network education on 3TNet
  - e-Health – provide hospital and social service through 3Tnet
  - e-Show – show shanghai economic result through 3Tnet

Outline

- The Trend of IPTV
- Issues of Current Internet
- High Speed Network Development Plans
- The Proposal of China's 3TNet
- The Innovations of 3TNet
- Current Achievements of 3TNet
- Trend of Future Network and Services

The Development Trend of Future Networks

- **Traffic Characteristic has an impact on network architecture evolution**
  - Internet connected by distributed pure IP routers – dying out
  - Hybrid switching architecture (connection oriented packet switching) - blooming
  - Solve end-to-end QoS problem - final target
  - From core network to edge network, optical communication and devices will change future networks
  - Gradually movement from IPv4 to IPv6
  - Development of broadband mobile access, ubiquitous application requirements
  - Considering security, controllable, management and economy

Next Step of 3Tnet

- The success of 3TNet at core network, edge network and streaming media traffic will directly affect our country's new generation network and will put forward more research topics
- To build large scale real user oriented new generation network test bed is our country's next 5 five year's plan, which is an opportunity to transcend network technology of developed countries
- We will deploy network architecture, critical network devices, new traffic and provision mode on the above test bed

Conclusions

- IPTV oriented large-scale concurrent streaming media services will produce the major traffic in high speed network
- IPTV calls for a new generation high speed network architecture
- New generation high speed network foretells huge commercial opportunities and continuous technology innovation

Thank you!

Questions?